EMBER™

BY WILDFIRE

32″ Ember Grill

Owner's Manual



From Setup to Sizzle Your Ember Grill Guide

For up-to-date information, visit our website at: wildfireoutdoorliving.com

SERIAL LABEL HERE

WELCOME TO

YOUR EMBER GRILL GUIDE

EMBER™

BY WILDFIRE

WELCOME TO THE EMBER EXPERIENCE

Congratulations on your purchase of an Ember™ by Wildfire grill! At Wildfire Outdoor Living, we believe every meal starts with great moments, gathered around the grill with family and friends, sharing food, laughter, and good company.

To help you get the most out of your Ember grill, and to keep every cookout safe and enjoyable, please read and follow this Owner's Manual before your first use. Doing so helps prevent damage, personal injury, or death.

BEFORE YOU FIRE IT UP

- **Read** through this manual thoroughly and follow all warnings.
- **Thoroughly** inspect your Ember grill and components for any shipping or handling damage.
- **Remove** all packaging materials, labels, and promotional inserts from your grill.
- **Register** your grill at https://wildfireoutdoorliving.com/product-registration/.
- **Grill** outdoors only, in a well-ventilated area.

Register Your Grill

DANGER

IF YOU SMELL GAS:

- **Shut off gas to the appliance.**
- **Extinguish any open flame.**
- **Open lid.**
- **If odor continues, keep away from the appliance and immediately call your gas supplier or your fire department.**

WARNING

- **Do not store or use gasoline or other flammable liquids or vapors in the vicinity of this or any other appliance.**
- **An LP cylinder not connected for use shall not be stored in the vicinity of this or any other appliance.**

SYMBOLS USED IN THIS MANUAL

Important information or instruction

CAUTION

Failure to heed Caution could result in minor or moderate injury; or, could cause product or property damage.

WARNING

Failure to heed Warning could result in death or serious injury; or, will cause product or property damage.

DANGER

Failure to avoid Danger will result in death or serious injury and/or cause damage.

YOUR GRILLING ROADMAP

SAFETY 5

GENERAL SAFETY 5

FUEL AND FIRE SAFETY 6

BURN AND INJURY PREVENTION 6

BEFORE GETTING STARTED 7

GETTING TO KNOW YOUR GRILL 8

EMBER GRILL 32”..... 8

DIMENSIONS 8

FEATURES AND BENEFITS 10

GETTING THINGS READY 11

INSTALLATION TYPES 12

CLEARANCES 12

VENTILATION 14

INSULATING LINERS 16

LEVEL SURFACE 17

ENVIRONMENTAL CONSIDERATIONS 17

OPERATING TEMPERATURE 18

GAS REQUIREMENTS 19

INSTALLING NATURAL GAS LINE 20

INSTALLING LARGE PROPANE (LP) 21

ELECTRICAL REQUIREMENTS 22

SETTING UP YOUR GRILL 23

BEFORE YOU BEGIN 23

ASSEMBLE THE GRILL 25

BUILT-IN INSTALLATIONS 26

CONNECTING GAS 27

CONNECTING THE TRANSFORMER 31

HOW TO USE YOUR GRILL 32

FIRST TIME USE 32

CONTROL KNOBS 32

LIGHTING THE GRILL 32

COOKING ON THE GRILL 33

COOKING METHODS 34

COOKING TIPS 34

HOW TO USE ACCESSORIES 36

DROP-IN GRIDDLE 36

MAINTAINING YOUR GRILL 37

MAINTENANCE GUIDELINES 37

MATERIALS 37

CLEANING THE EXTERIOR 38

CLEANING THE INTERIOR 39

CHANGING AN INTERIOR LIGHT BULB 40

REPLACING A CONTROL KNOB AND BASE 41

REPLACING A LIGHT RING 41

ADJUSTING A VALVE 42

ADJUSTING AN AIR SHUTTER 44

REPLACING A GRILL BURNER 43

ANNUAL MAINTENANCE 44

TROUBLESHOOTING 45

PARTS ORDERING 49

WARRANTY 51

HOW TO CONTACT US 53

CUSTOMER SUPPORT 53

PRODUCT REGISTRATION 53

SAFETY

GENERAL SAFETY

- For Outdoor Use Only – Ember grills are designed for outdoor use in open, well-ventilated spaces. Never operate indoors or in enclosed areas (garages, sheds, breezeways, covered patios, etc.).
- For Residential Use Only – Ember grills are intended for residential use by the original owner. They are not approved for commercial use by anyone other than the homeowner.
- NEVER use indoors or in any type of enclosed area, such as a garage, shed or breezeway. Keep clear of trees and shrubs. The grills are not intended for installation in or on recreational vehicles, portable trailers, boats or any other moving installation.
- To reduce the risk of serious or fatal injury from breathing toxic fumes and from explosion and fire as a result of leaking gas, use only outdoors in an open area with good ventilation. NEVER obstruct the flow of combustion and ventilation air.
- Fire Hazard: The area surrounding your new grill should be kept clean and free from flammable liquids and other combustible materials such as mops, rags or brooms, as well as solvents, cleaning fluids, lighter fluid, and gasoline.
- NEVER use the grill in windy conditions. If located in a consistently windy area (oceanfront, mountaintop, etc.), a wind break is required. Always adhere to the clearances specified on the LOCATING THE GRILL section of this manual.
- NEVER leave the grill unattended while cooking.
- Risk of Explosion: NEVER use natural gas in a unit designed for liquid propane gas or vice versa.
- Do not use lighter fluid in/on a gas grill.
- NEVER allow children to use or play near the grill. Keep children and pets away from a hot grill at all times.
- Installation and any repairs or replacement of parts should be performed by a qualified service technician. If you are not qualified to install, repair, or replace parts of your grill, please hire a qualified professional contractor or technician to do so.
- BURN HAZARD: NEVER lean over an open grill. Do not place clothing or other flammable material on or near the grill. Do not wear loose-fitting clothes or long sleeves while using the grill as some fabrics can be highly flammable and, if ignited, may result in personal injury or death.
- BURN HAZARD: When using the grill, do not touch the grill rack, burner grate, or immediate surroundings as these areas become extremely hot and can cause burns. Always use a covered/gloved hand when opening the grill hood and only do so slowly to allow heat and steam to escape.
- ALWAYS: have an ABC fire extinguisher accessible.
- NEVER attempt to extinguish a grease fire with water or other liquids as this may cause a flashback that could result in personal injury or death.
- NEVER use aluminum foil to line the grill racks or the drip trays, this can alter airflow for proper combustion and also build up heat in the control area causing damage to the knobs.
- NEVER allow grease or other hot material to drip from the grill onto the valve, hose, or regulator. If that occurs, turn off the fuel supply immediately. After the grill has cooled, determine the cause of the dripping and correct it. After cleaning the valve, hose and regulator, perform a soapy water leak test before continuing use. If a leak is discovered, call a qualified technician for service.
- NEVER heat any unopened glass or metal container of food on the grill. Pressure may build up and cause the container to burst, possibly resulting in death, serious personal injury, or property damage.

SAFETY

GENERAL SAFETY

- ALWAYS: Keep any electrical supply cords away from water or heated surfaces. Electrical cords should be placed away from walkways to avoid a tripping hazard.
- ALWAYS: Keep gas supply lines as short as possible.
- NEVER move the grill when hot.
- NEVER use grill while under the influence of drugs or alcohol.
- NEVER store a spare gas cylinder under or near your grill.
- FIRE HAZARD: NEVER grill without the drip tray in place; hot grease could leak downward and produce a fire or an explosion. Drip tray should be pushed all the way to the rack located just under the grill.
- FIRE HAZARD: Grease is extremely flammable. Let hot grease cool down before attempting to handle or dispose of it. The drip tray should be cleaned on a regular basis and kept free of grease.
- In the event that a burner goes out, turn burner knobs to the full OFF position, fully open the grill hood and let it air out. NEVER attempt to use the grill until the gas has had time to dissipate.
- Do not use a grill until a leak check has been completed.
- ALWAYS: Turn off the LP cylinder tank valve when your grill is not in use.
- ALWAYS: Ensure the control knobs are in the “OFF” position when not in use.
- ALWAYS: Use only a Ground Fault Interrupter (GFI) protected circuit with this outdoor cooking gas appliance.

FUEL AND FIRE SAFETY

- Use the Correct Fuel – Do not connect natural gas to a propane grill or vice versa. This may cause explosion or serious injury.
- No Lighter Fluid – Never use lighter fluid or other accelerants on or in a gas grill.
- Fire Readiness – Keep an ABC-rated fire extinguisher accessible at all times.
- Grease Fires – Never use water or any liquid to extinguish a grease fire. Using extreme caution, turn off the gas supply immediately and use a fire extinguisher if necessary.
- Foil Warning – Do not line grill racks or drip trays with aluminum foil. This restricts airflow, causes overheating, and may damage control components.
- Grease and Leak Prevention – Avoid letting grease drip onto valves, hoses, or regulators. If it occurs, turn off gas immediately. Once cooled, clean and perform a soapy water leak test. If a leak is detected, call a qualified service technician.

BURN AND INJURY PREVENTION

- Stay Clear of Flames – Never lean over an open grill. Avoid loose or flowing clothing that could catch fire.
- Hot Surfaces – Grill racks, burners, and surrounding areas become extremely hot. Use gloves or heat-resistant tools and open the hood slowly to allow heat and steam to escape.
- Children and Pets – Keep children and pets away from the grill during and after use.
- Professional Service Only – Installation, repairs, and part replacements must be performed only by a qualified service technician.

NOTICE	**CALIFORNIA PROPOSITION 65** The burning of gas cooking fuels (propane gas) generates some byproducts (including Benzene) which are on the list of substances which are known by the State of California to cause cancer (birth defects) or reproductive harm. California law requires businesses to warn customers of potential exposure to such substances. To minimize exposure to these substances, always operate this unit according to the Use and Care Manual, ensuring you provide good ventilation when cooking with gas.

BEFORE GETTING STARTED

For your safety and the safety of others, and to have the best experience possible, please obey all warnings and instructions. Use your grill only as intended and as instructed in this manual. These instructions are not meant to cover every possible condition and situation that may occur. Common sense and caution must be practiced when installing, operating, and maintaining any gas appliance. A digital copy of this manual can be downloaded from our website at:

https://wildfireoutdoorliving.com/resources/.

- Prior to installation, thoroughly inspect your Wildfire grill and components for shipping damage.
- Remove all packaging materials, protective film, labels, and promotional inserts from your grill.
- Grill outdoors only, in a well-ventilated area.
- Never operate your grill inside a building, garage, or any enclosed space.
- Check for leaks before lighting the grill. Never light the grill until all leaks are fixed.

INSTALLERS: Leave this manual with the owner.

OWNERS: Keep this manual for future reference as it contains important instructions for the safety, care, and use of your grill.

REMEMBER: Safety is the start of every great Wildfire experience. Follow these precautions so every gathering is safe, effortless, and unforgettable.

PACKAGING

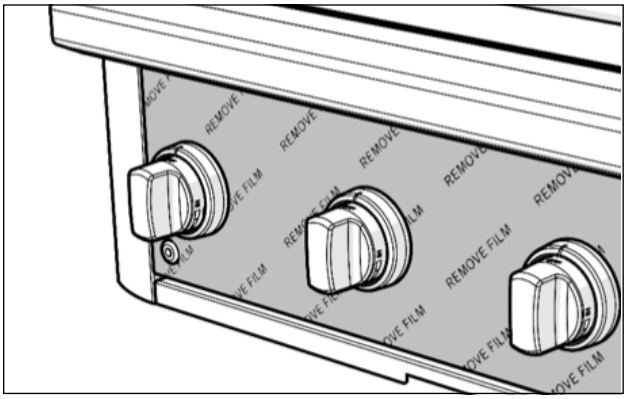

IMPORTANT: Your Ember grill comes with protective film to protect the stainless-steel finish during shipping. This film MUST be removed prior to lighting the grill. Heat from the grill will melt the plastic to the metal making it very difficult to remove and will produce odors and potentially harmful fumes.

GETTING TO KNOW YOUR GRILL

EMBER GRILL 32”

1. Hood
2. Thermometer
3. Hood Light (2)
4. Warming Rack
5. Cooking Grate (4)
6. Ceramic Briquette Tray (3)
7. Sear Burner
8. I-Burner (3)
9. Heat divider (3)
10. Transformer
11. Pressure Regulator
12. Control Knob (4)
13. Control Knob Base (4)
14. Control Knob Light Ring (4)
15. Gas Valve
16. Control Panel
17. Gas Flex Line
18. Firebox

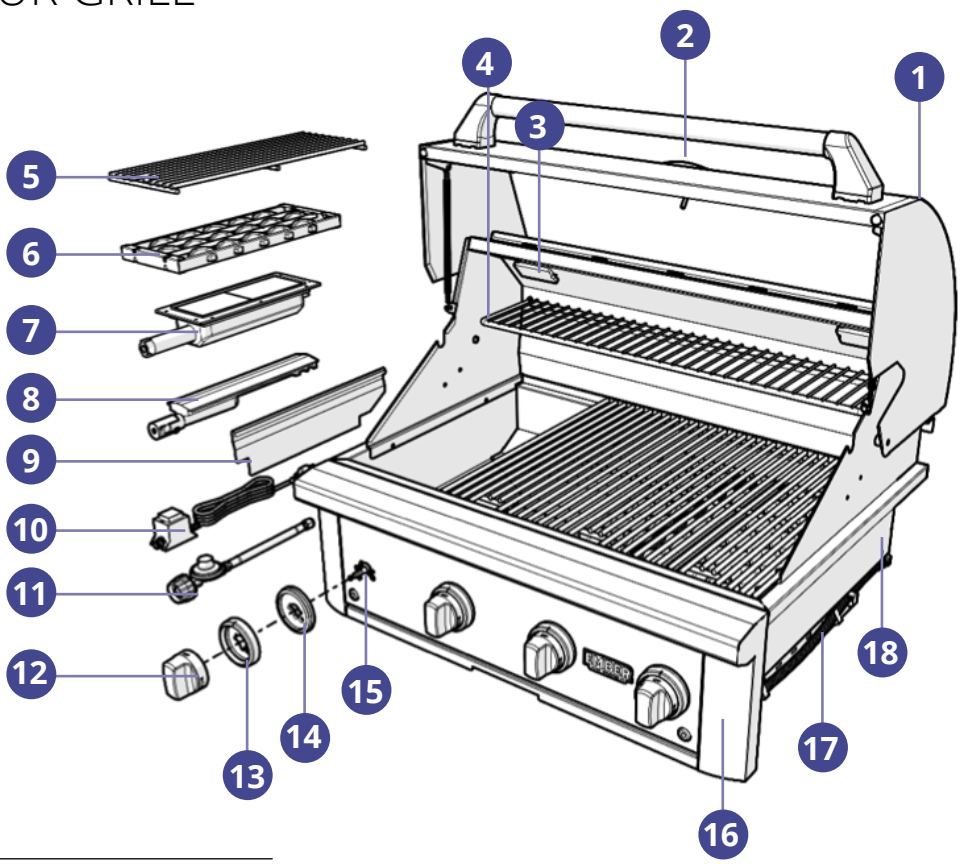

Stainless Steel Models	**Black Stainless Steel Models**
EMB32G-SS-LP	EMB32G-BSS-LP
EMB32G-SS-NG	EMB32G-BSS-NG

DIMENSIONS

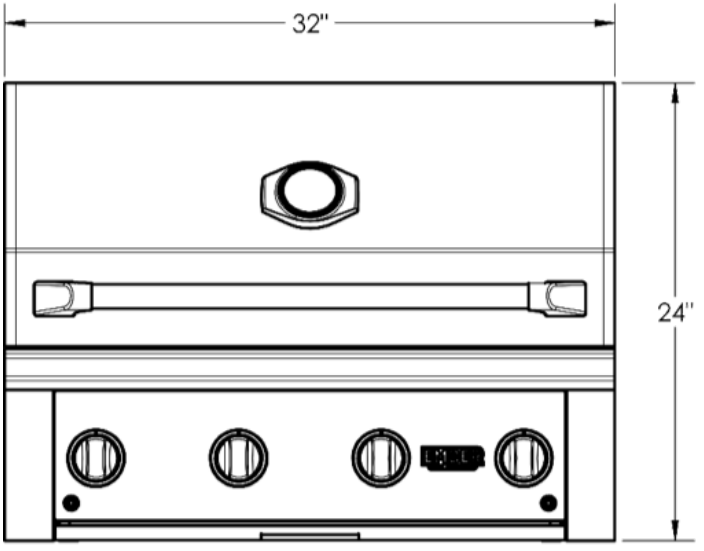

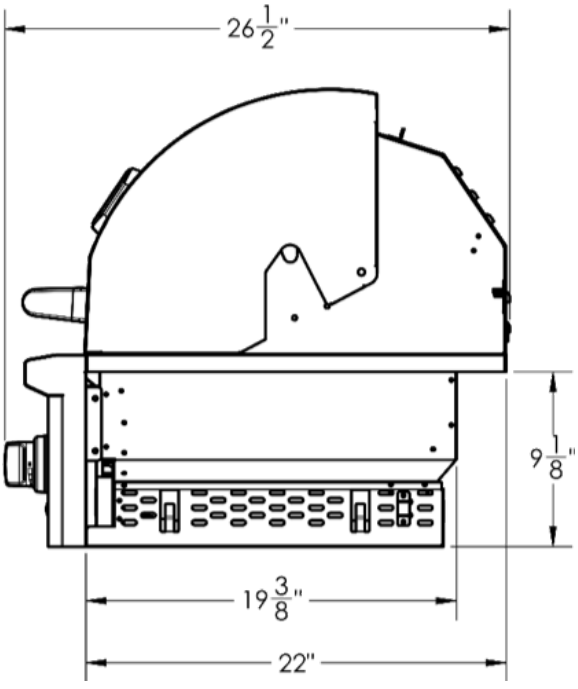

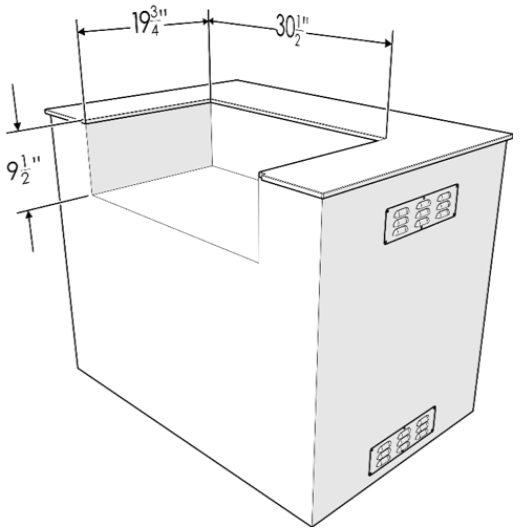

Non-Combustible Island Materials

Cutout: 30 ½" x 19 ¾" x 9 ½"

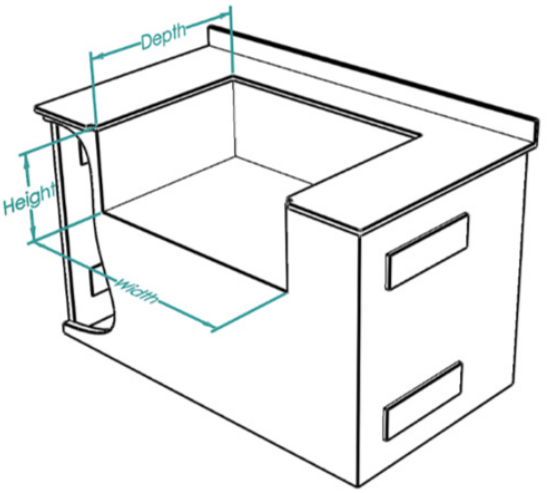

Combustible Island Materials

Insulating liner required,
see liner details on page 16.

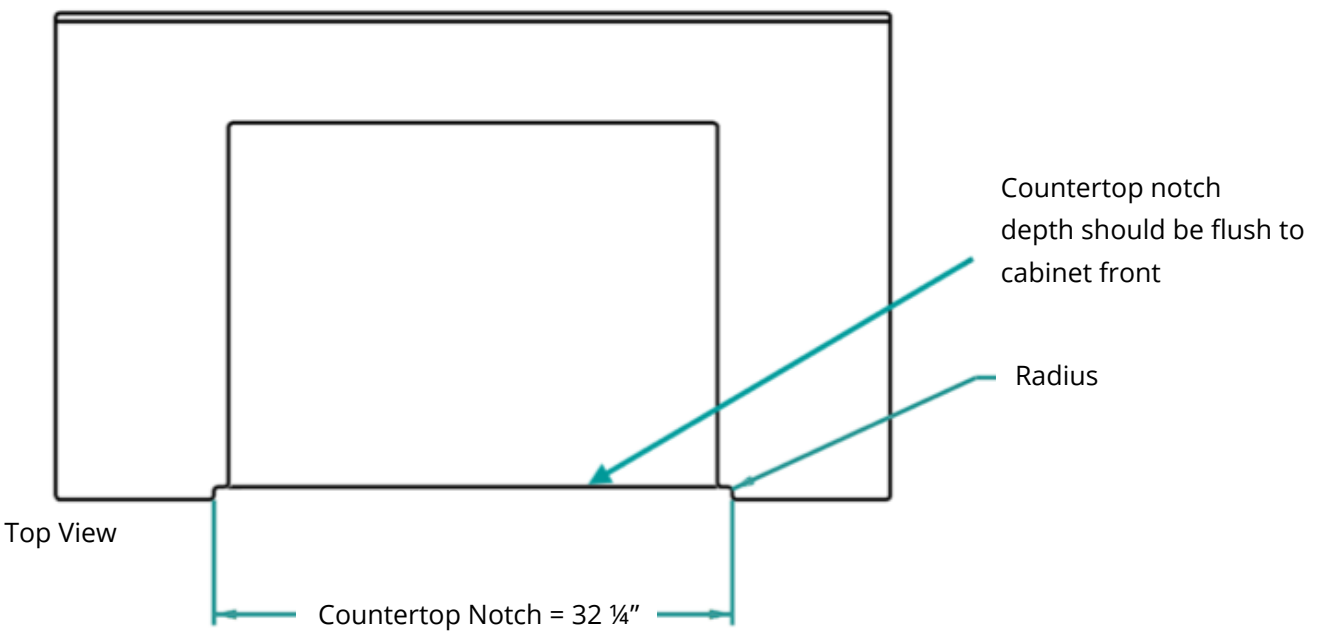

FEATURES AND BENEFITS

Every Ember grill is designed to deliver a professional-grade outdoor cooking experience blending precision engineering, premium materials, and timeless design. Available in both traditional and black 304 stainless steel, Ember grills set a new standard for quality, performance, and style in any outdoor kitchen.

Signature Design

- The soft, contoured edges of each grill complements surrounding finishes, providing a seamless fit in any outdoor kitchen design.
- Every detail, from the polished trim to the control accents, reflects Wildfire Outdoor Living's commitment to craftsmanship and refinement.

Professional Performance

- Cast Stainless Burners are engineered for optimal heat distribution and long-lasting performance. The curved, overhang design allows grease to run off quickly, helping prevent buildup and reducing the likelihood of clogged flame ports. This ensures a consistent, even flame across the cooking surface for superior reliability and control.
- Stainless Steel Cooking Grates provide the perfect balance of heat retention and durability. The heavy-gauge stainless steel rods distribute heat evenly across the cooking surface, helping to cook food consistently while creating exceptional sear marks.
- The included Sear Burner delivers intense, concentrated heat designed to lock in flavor and create restaurant-quality results right in your backyard. The high-output burner reaches very high temperatures in moments, perfecting searing the surface of meats while sealing in natural juices and producing a rich, caramelized crust.
- Ceramic Briquettes radiate heat efficiently creating a consistent heat that also absorbs drippings and converts them into flavorful smoke, infusing food with a rich taste while protecting the burners below and preventing flare-ups.

Engineered for Experience

- Designed to anchor any outdoor kitchen, the 32" Ember grill combines performance, style, and versatility.
- Every component is crafted from heavy-gauge 304 stainless steel, built to endure outdoor conditions while maintaining a flawless appearance.
- Whether in sleek black or traditional stainless, every Ember grill embodies durability, performance, and elegance, the core of what outdoor living should be.

At Wildfire Outdoor Living, we believe that outdoor cooking should be as inspiring as it is effortless. Every grill we build represents our passion for quality, our pursuit of innovation, and our dedication to helping you create memorable experiences around the grill.

GETTING THINGS READY

Check your local building codes for the proper method of installation. In the absence of local codes, this unit must be installed in accordance with either, as applicable:

1. ANSI Z223. 1/NFPA 54, CSA B149.1, or CSA B149.2; or
2. ANSI A119.2/NFPA 1192 and CSA Z240 RV Series, as applicable.

NOTE: Proper installation and clearances are essential for safe operation and warranty coverage. Follow these guidelines and local codes when installing your Ember grill.

Outdoor Use Only

Ember grills are designed for outdoor use in open, well-ventilated spaces. Never operate indoors or in enclosed areas such as garages, sheds, or sun rooms. Please note the following:

- An appliance is considered to be outdoors if installed with shelter no more inclusive than with walls on three sides, but with no overhead cover; all openings must be permanently open; sliding doors, garage doors, windows, or screened openings are not considered openings.

- An appliance is considered to be outdoors if installed with shelter no more inclusive than within a partial enclosure that includes an overhead cover and not more than two sidewalls. The sidewalls may be parallel, as in a breezeway, or at right angles to each other; all openings must be permanently open; sliding doors, garage doors, windows, or screened openings are not considered permanent openings.

- An appliance is considered to be outdoors if installed with shelter no more inclusive than within a partial enclosure that includes an overhead cover and three sidewalls, as long as 30% or more of the horizontal periphery of the enclosure is permanently open. All openings must be permanently open; sliding doors, garage doors, windows, or screened openings are not considered as permanent openings.

We strongly recommend professional installation of your Wildfire grill.

Gas fittings, regulator, and installer-supplied shut-off valves must be easily accessible.

DANGER

OUTSIDE USE ONLY

Use the grill only outside in a well-ventilated area. Never use the grill inside a home, building, garage, basement, underground shelter, shed, sun room, or other enclosed area without an approved ventilation system.

INSTALLATION TYPES

Built-In

Built-in installations are those in which the grill will be mounted in a fixed island, pedestal, wall, or other permanent structure.

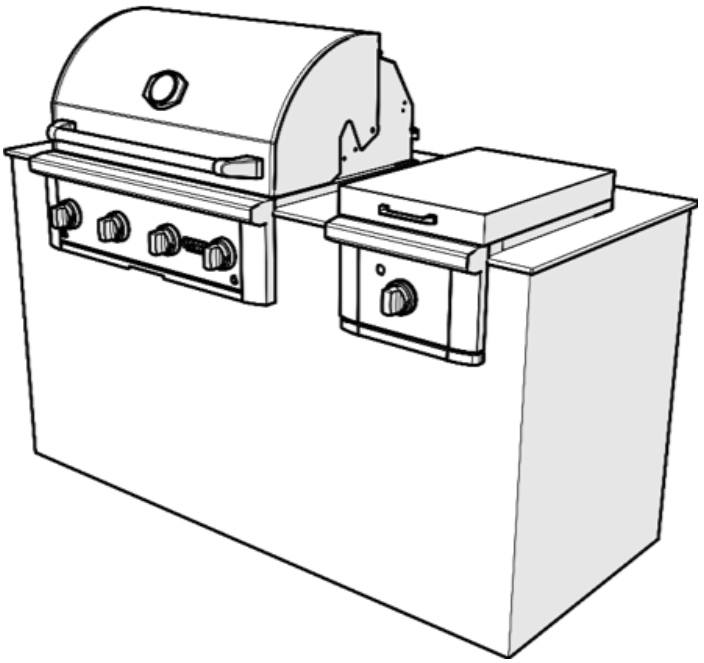

CLEARANCES

Clearance to Non-Combustible Materials

Ember grills may be placed directly against or adjacent to non-combustible surfaces, provided ventilation is not obstructed.

- If a wall, partition, or other obstruction blocks airflow behind the grill, maintain a minimum 7" clearance from the back of the grill to the wall for proper ventilation and hood operation.
- When there is no rear obstruction, a 2" clearance behind the grill is sufficient for the hood to open fully.
- Even if exterior surfaces are non-combustible (tile, stone, stucco, etc.), underlying materials such as wood framing is still considered combustible unless properly insulated.
- If installed under an overhead structure that has only non-combustible materials, there must be a minimum height of 60” from the grill grates to the overhead structure.
- If an overhead structure does not have sufficient ventilation to prevent heat and gas build-up, a ventilation hood must be installed directly above the grill.

Clearance to Combustible Materials

Installing this product into a combustible enclosure without an insulated liner could result in fire, property damage and personal injury.

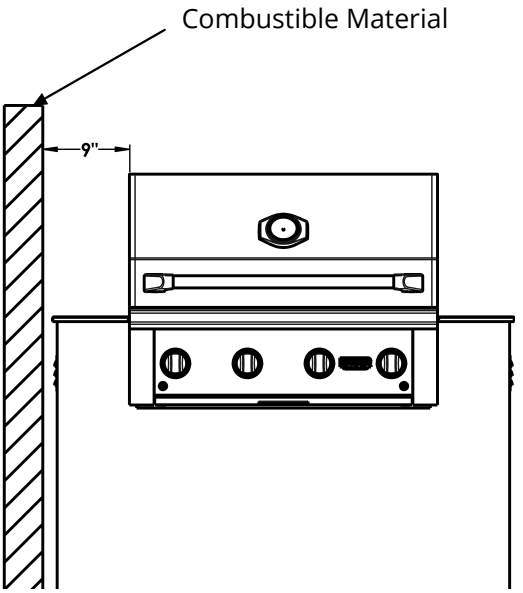

- Do not locate the grill on a balcony or underneath an overhang that is made of wood or other combustible materials.
- To protect surrounding surfaces and maintain your Wildfire warranty, keep a minimum 9" clearance in all directions from any combustible island or enclosure materials (wood, vinyl, decking, etc.).
- Any combustible walls, framing, or cabinetry must remain outside the 9" safety clearance zone.
- If your island or enclosure contains combustible materials, even if covered with a non-combustible finish, those materials must be properly insulated or shielded.
- When installing your Ember grill into an island or structure made with combustible materials (e.g. engineered countertops, composite cladding), use a Ember grill liner to isolate the materials. See the INSULATING LINERS section of this manual.
- Ensure the hood can open freely without contacting nearby walls or surfaces.
- Do not locate the grill near trees, bushes or other landscape features or overhangs.
- Do not store combustible materials underneath the grill without properly isolating the materials with fire-proof materials and insulation.

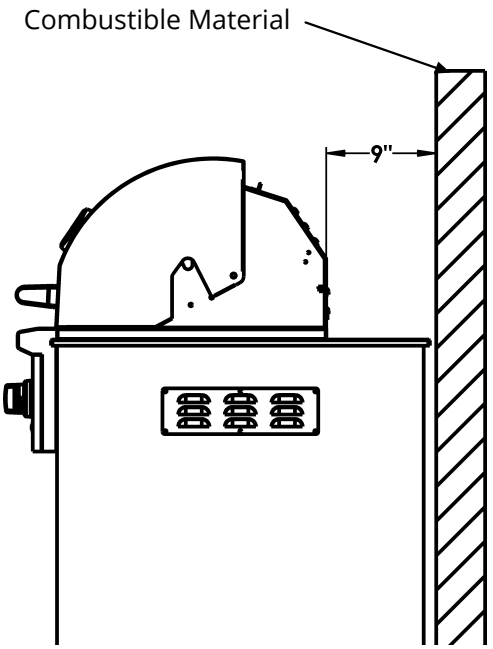

VENTILATION

Enclosure Ventilation

Always provide ventilation openings in built-in enclosures or carts to allow airflow and prevent heat or gas buildup. At minimum:

- Each cabinet that contains a gas connection or supply line must include a minimum of two ventilation openings to prevent gas build up inside the island.
  - For Liquid Propane (LP), two vents must be placed near the bottom of the island.
  - For Natural Gas (NG), two vents must be placed near the top of the island.
- Each vent must provide at least 20 square inches of open area and allow direct access to fresh air.
- Installing two vents on each side of the cabinet will significantly improve circulation and overall ventilation performance.

⚠ WARNING

Proper airflow is essential for safe operation and to prevent the buildup of gas inside enclosed spaces.

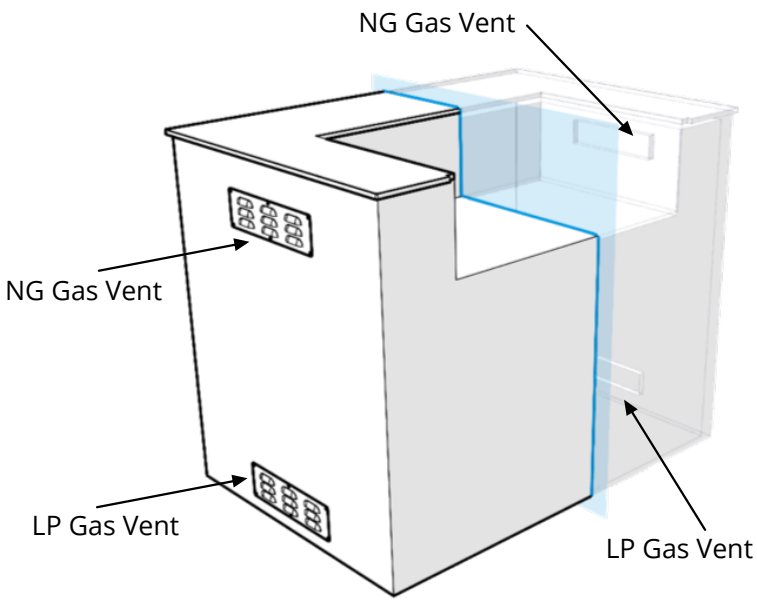

VENTILATION

Ventilation Hood

Never install or operate your Ember grill beneath any combustible structure or tree unless an approved ventilation hood is installed directly above the unit. An approved ventilation hood must meet all of the following requirements:

- Must be UL-certified and specifically rated for outdoor use.
- Must be installed strictly according to the hood manufacturer's specifications.
- Must be positioned a minimum of 30 inches (76.2 cm) above the top of the cooking surface.
- Must be at least 6 inches (15.2 cm) wider than the grill, providing 3 inches (7.6 cm) of overhang on each side of the grill.
- Must be at least 6 inches (15.2 cm) deeper than the grill, providing 3 inches (7.6 cm) of overhang on the front and back of the grill.

Clearance to Non-Combustible Materials

The minimum clearance to non-combustible overhead materials is 60 inches (152 cm).

Clearance to Combustible Materials

Refer to the ventilation hood manufacturer's specifications for minimum height from the hood to the overhead structure.

DANGER

Failure to follow ventilation requirements could result in fire, property damage, personal injury, or death.

Proper ventilation is essential for safe operation. Always confirm your installation meets local codes and Wildfire clearance requirements before using your grill.

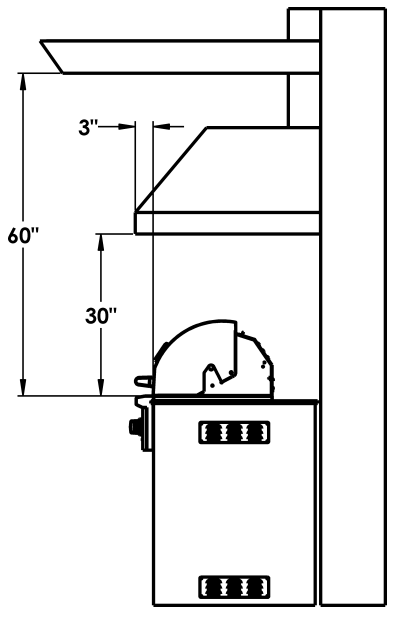

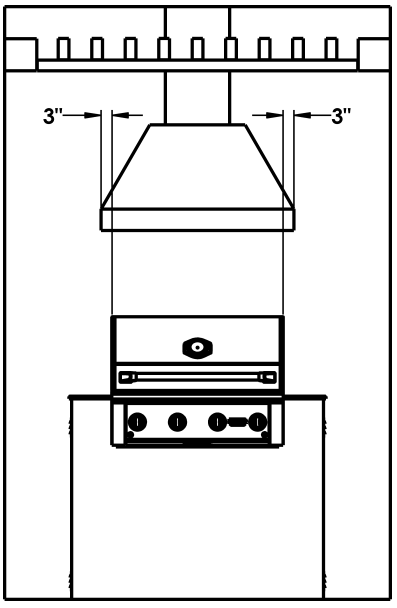

INSULATING LINERS

Wildfire Outdoor Living's zero clearance Insulating Liners allow for safe installation of an Ember grill into an outdoor kitchen island or structure made with combustible materials. The liner protects surrounding surfaces from heat transfer and ensures safe operation when installed correctly. Refer to this manual when working with your outdoor kitchen professional or when building your grill enclosure.

When a liner is properly installed, combustible materials may touch the liner at and below countertop level.

NOTE: Insulating Liners sold separately.

WARNING

Proper airflow is essential for safe operation and to prevent the buildup of gas inside enclosed spaces.

ITEM	COMPONENT
1	Bottom Panel
2	Left Panel
3	Right Panel
4	Rear Panel

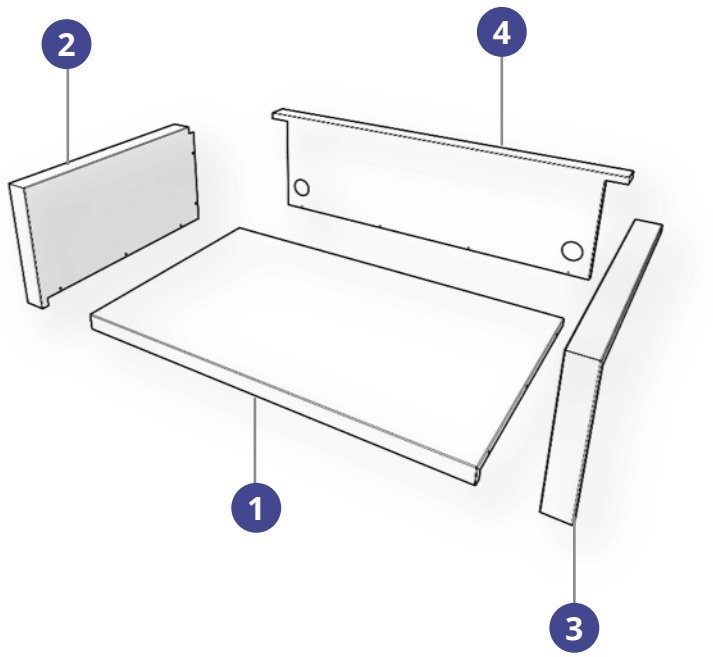

LINEAR DIMENSIONS

Model # EMBLINER32G

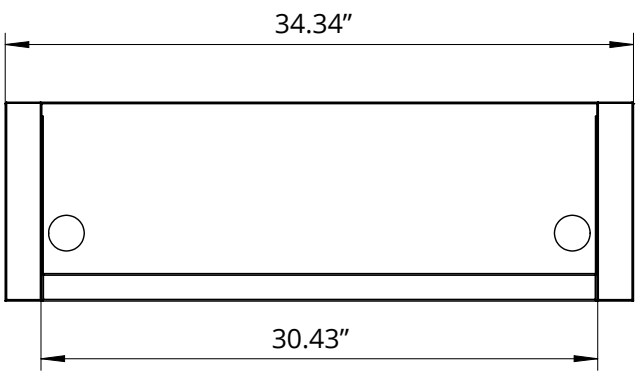

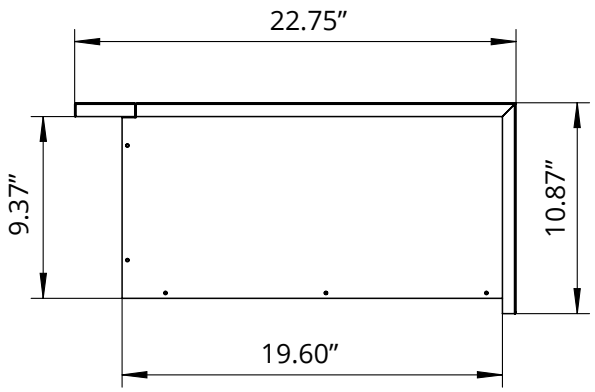

LEVEL SURFACE

Accuracy matters for performance and safety. Proper leveling during installation is critical to ensure consistent burner performance and even heat across the cooking surface. A grill that is not level may cause uneven heating, poor combustion, or flame irregularities.

For built-in installations, ensure that the countertop or top of the island or enclosure is level. For best results, the surface should be smooth and flat. Use a standard leveling tool to confirm prior to securing the grill in place.

For installations on a cart, ensure that the ground is not sloped, bumpy, or uneven. The cart should be placed on a hard surface free from grass, landscaping, or other flammable materials.

ENVIRONMENTAL CONSIDERATIONS

Windy Conditions

Your Ember grill is a high-performance outdoor appliance that requires a steady flow of fresh air to ensure proper burner combustion and efficient operation. The grill is engineered to draw in air through the control panel area and vent exhaust gases through the gap between the front and rear hoods.

However, windy conditions can disrupt this natural airflow which may lead to:

- Uneven burner performance or flame disturbance.
- Heat buildup around the control panel area.
- Hot or damaged control knobs, melted igniter wires, or discolored metal surfaces.

Grill Placement

Proper grill placement is important for safe operation and consistent cooking performance.

- Position the grill so prevailing winds blow toward the front control panel (toward the back of the operator while cooking).
- Avoid locations where wind can blow directly into the rear of the grill, as this may disrupt exhaust airflow and affect burner performance.
- If the installation area is exposed to wind, provide a windbreak behind the grill, such as a non-combustible wall, fence, or partition.
- Maintain adequate openings below and around the grill to ensure proper airflow and ventilation.

Overhead Clearance: A minimum clearance of 60 inches (152 cm) must be maintained between the grill and any combustible overhead construction.

On windy days, avoid leaving the hood closed for more than 15 minutes while burners are on high.

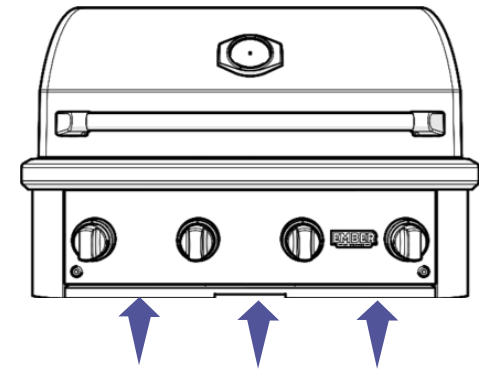

IMPORTANT: Wind striking the rear of the grill can restrict exhaust airflow and cause excessive heat build-up inside the unit. Select a location that minimizes direct wind exposure to the back of the grill.

ENVIRONMENTAL CONSIDERATIONS

Overheating

Even under ideal conditions, outdoor grills produce more heat than typical indoor ranges. Wind adds oxygen to the combustion of gas which can produce even more heat and can direct heat away from its intended exhaust path. To prevent overheating and damage to the grill or personal:

- Avoid leaving the hood closed for more than 15 minutes with the burners on high on windy days. Intermittently open the hood briefly to let out hot air while maintaining sufficient temperature on the grate surface.
- Always test control knobs for temperature before fulling grabbing them. If you suspect excessive heat buildup, use a grill mitt to open the hood and adjust the burner settings.

NOTE: Damage resulting from wind-related heat buildup, including melted knobs, discolored panels, or ignition component failure is not covered under the Wildfire warranty.

Near the Ocean

Grills installed in coastal environments are exposed to salt air, humidity, and airborne contaminants that can accelerate surface corrosion and staining. To help protect the finish and maintain the appearance of your grill:

- Clean all stainless steel surfaces regularly using a high-quality oil-based stainless steel cleaner and protectant.
- Wipe down exterior surfaces frequently to remove salt deposits and moisture buildup.
- Always keep the grill covered with an Ember Grill Cover when not in use.

IMPORTANT: Salt air and coastal conditions require more frequent maintenance than standard outdoor environments. Regular cleaning and use of a properly fitted cover will help preserve the appearance and performance of your grill.

High Elevations

Air at higher elevations has less oxygen. This can prevent the full combustion of liquid propane and natural gas and, in turn, prevent the grill from reaching its maximum temperature. Wildfire offers high elevation orifice kits to keep your grill operating to its fullest at any elevation. For more information and to order a kit, please contact: customerservice@wildfireoutdoorliving.com or call 602-268-9353.

OPERATING TEMPERATURE

The Ember grill is designed to operate in typical outdoor cooking temperatures. For your general health and safety, the grill shouldn't be operated in temperatures too extreme to operate safely. The outside air temperature should be 0°F - 120°F (-17°C - 49°C).

GAS REQUIREMENTS

Pressure Regulation is Mandatory

DO NOT connect the gas supply directly to the grill. Every Ember grill requires a pressure regulator to operate safely and efficiently. The regulator provided with your grill must be installed; this is required by local and national gas codes.

⚠ WARNING

Removing, altering, or failing to use the supplied regulator may cause fire, personal injury, or property damage; and will void all warranty coverage.

Confirming Gas Type

Each Ember grill is preset at the factory for use with either Natural Gas (NG) or Liquid Propane (LP). It is essential that the fuel source connected to your grill matches this configuration. You can verify the correct gas type by checking the rating plate, which is located on the side of the grill and includes:

- Model and serial numbers
- Gas type and operating specifications

Only use the fuel type listed on the rating plate. DO NOT attempt to operate the grill with a different type of gas.

Gas Supply Pressure

For both liquid propane and natural gas, pressure regulation is mandatory and essential for optimal grill performance. For the pressure regulator to maintain constant pressure and optimal gas flow, the incoming gas supply must be consistent and within the following ranges:

FUEL TYPE	MINIMUM INLET PRESSURE	MAXIMUM INLET PRESSURE
Liquid Propane (LP)	8″ W.C. (.4 psi)	13″ W.C. (.5 psi)
Natural Gas (NG)	3.5″ W.C. (.14 psi)	10.5″ W.C. (.25 psi)

*W.C. = Water Column, psi = pounds per square inch

Gas Conversion Kits

Both the pressure regulator and manifold orifices are tuned at the factory for the gas type specified on the rating plate.

If you need to convert your grill to a different fuel type, use an Ember-certified conversion kit. Conversion must be performed by a qualified technician and must comply with:

- ANSI Z223.1/NFPA 54 – National Fuel Gas Code (United States)
- CSA B149.1 / B149.2 – Natural Gas and Propane Installation Codes (Canada)

INSTALLING NATURAL GAS LINE

IMPORTANT: Professional Installation Required

All natural gas connections must be performed by a licensed contractor or a qualified representative from your local gas company. Improper installation may result in gas leaks, fire, or personal injury.

To maintain proper performance and safety:

- Keep the gas line as short and direct as possible.
- Size the gas supply line to support the total BTU demand of all connected gas appliances and take into account the pressure loss over long pipe lengths.
- Use a 3/8 inch or 1/2 inch gas line for connection. A ¾ inch or greater gas line may be needed for long runs.
- Install a manual shut-off valve in an accessible location as required by code.

When sealing threaded pipe connections, apply an outdoor-rated, gas-approved thread compound, leaving the last two threads clean to prevent a blockage or debris from entering the system. Do not use thread compound or sealant on flare fittings.

Regulator Guidelines

- Minimum Gas Pressure: 3.5” Water Column
- Maximum Working Pressure: 0.5 psi
- Leak Testing: Always perform a leak test on the regulator before operating the grill. Never use or operate the grill until all connections have been leak-tested and confirmed safe.
- Installation Location: The regulator should be installed directly to the back of the grill or immediately downstream of the shut-off valve.



Natural Gas (NG) pressure below 4” Water Column or Liquid Propane pressure below 11” Water Column may decrease the performance of your grill.

Built-In Grill Installations

For built-in applications:

- Minimum Gas Pressure: 3.5” Water Column
- Maximum Working Pressure: 0.5 psi
- Leak Testing: Always perform a leak test on the regulator before operating the grill. Never use or operate the grill until all connections have been leak-tested and confirmed safe.
- Installation Location: The regulator should be installed directly to the back of the grill or immediately downstream of the shut-off valve.

Fuel Conversion or Service

If your gas needs change or service is required, contact your authorized Wildfire dealer or a qualified gas service technician. Improper conversion or unauthorized modifications may cause unsafe operation and will void your warranty.

Freestanding Grills

For freestanding Ember grills operating on natural gas, it is recommended to use a flexible stainless-steel metal hose. Approved hoses can be obtained through your authorized Wildfire dealer or at most professional hardware suppliers.

INSTALLING BULK PROPANE (LP)

When connecting your Ember grill to a large, fixed propane tank, a fixed installation regulator should be used to maintain gas pressure at the required level. The Wildfire recommended regulator can be converted to use either liquid propane or natural gas. The regulator, as shipped, is configured for natural gas and will need to be converted to use liquid propane before use. Contact customer service if you have questions about installing bulk propane. To convert the regulator:

1. Unscrew the top cap.

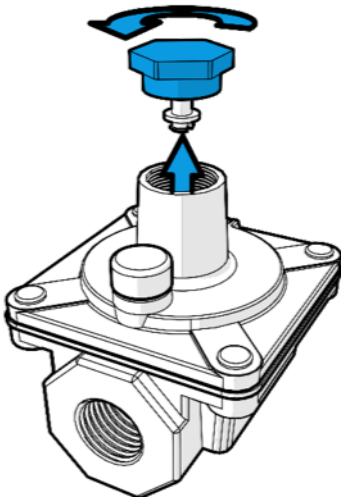

2. Pull the stem from the cap.

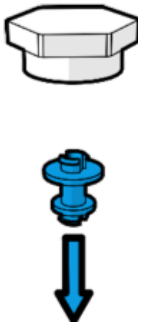

3. Flip the stem over and replace in the cap. Screw the cap back on.



ELECTRICAL REQUIREMENTS

IMPORTANT: All electrical connections for this appliance must comply with local electrical codes.

In the absence of local requirements, installation must follow the National Electrical Code (ANSI/NFPA 70) or, in Canada, the Canadian Electrical Code (CSA C22.1).

- This grill must be connected to a Ground Fault Interrupter (GFI) protected circuit for safe outdoor operation.
- The grill includes a three-prong grounded plug for protection against electric shock.
  - Never remove, alter, or cut off the grounding prong.
  - Always plug the grill directly into a properly grounded, three-prong outlet.
- If an extension cord is required, it must:
  - Be a three-wire, grounded type.
  - Carry a rating equal to or greater than the grill's electrical load.
  - Be approved for outdoor use (marked with "W" or "W-A").
- To avoid electrical shock:
  - Do not immerse the power cord, plug, or any electrical component in water or other liquids.
  - Unplug the grill when not in use, before cleaning, or before performing any maintenance.
  - Allow the appliance to cool completely before handling or storing.
- Prevent damage to the power cord:
  - Keep the cord away from hot surfaces and sharp edges.
  - Do not operate the grill if the cord or plug is damaged, frayed, or malfunctioning. Contact your authorized Wildfire dealer for service.
- Use the grill only for its intended purpose as an outdoor cooking appliance.

SETTING UP YOUR GRILL

BEFORE YOU BEGIN

- Verify the label on the box matches what was ordered, including model number and gas type – Liquid (LP) or Natural Gas (NG).
- Review the GETTING THINGS READY section of this manual.
- For built-in installations, verify that all gas and electrical lines meet all building codes and have a proper shut-off valve and breaker.
- If installing onto a cart, verify that the cart has been assembled properly and is positioned on a smooth, level surface.

Tools Needed

- Adjustable wrench
- #2 Phillips Screwdriver
- Pliers

Grill Components

1. Hood
2. Thermometer
3. Hood Light (2)
4. Warming Rack
5. Cooking Grate (4)
6. Ceramic Briquette Tray (3)
7. Sear Burner
8. I-Burner (3)
9. Heat divider (3)
10. Transformer
11. Pressure Regulator
12. Control Knob (4)
13. Control Knob Base (4)
14. Control Knob Light Ring (4)
15. Gas Valve
16. Control Panel
17. Gas Flex Line
18. Firebox

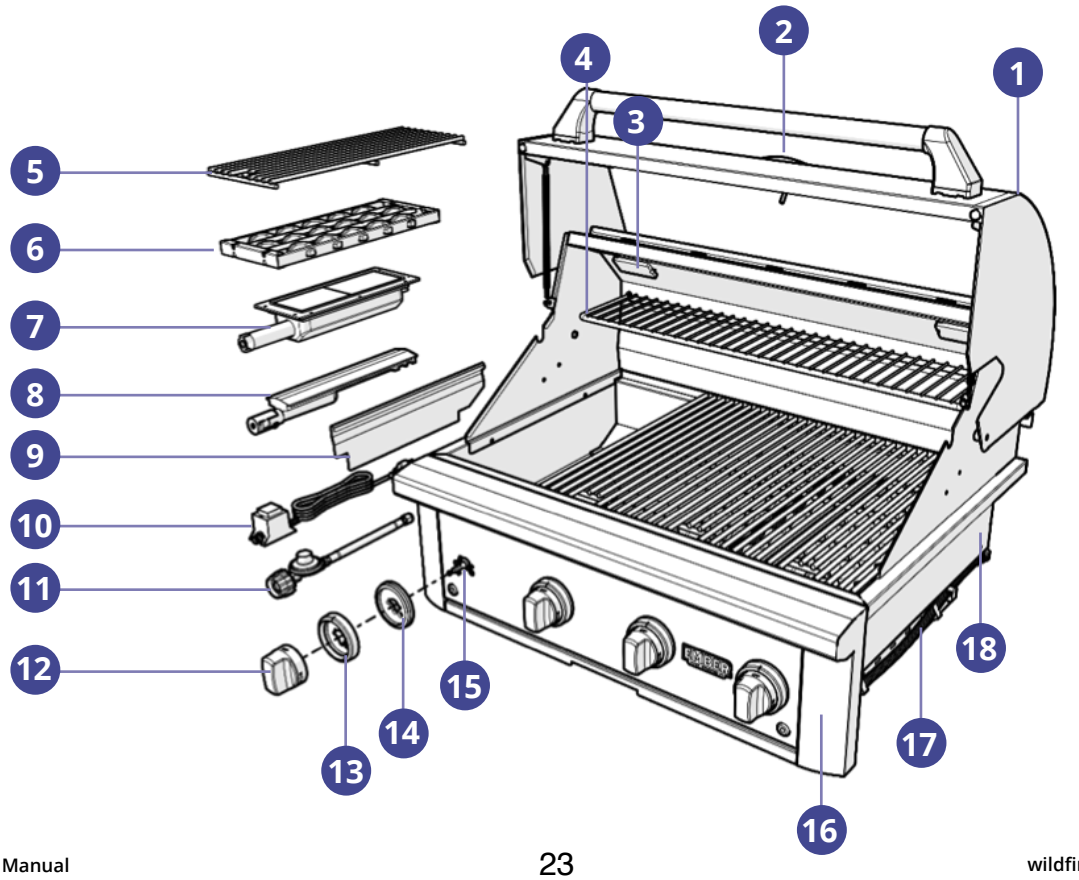

SETTING UP YOUR GRILL

Unpacking Your Grill

Before installing your Ember grill, carefully inspect the appliance and all included components for any signs of damage that may have occurred during shipping or handling. Look for dents, scratches, or loose parts that could affect operation or safety. If any damage or missing parts are found, contact your authorized Ember dealer before proceeding with installation or use. Save all parts and documentation. Verify the information on the product rating label including the model number, serial number, and gas type.

Place the grill on a smooth, stable surface in a well-lit area. Grills should always be lifted by two or more people to avoid unnecessary back strain. Do not install the grill onto an island or cart until you have checked for damaged or missing parts. Do not connect gas or electrical lines.

Remove Protective Film

Your Ember grill comes with protective film to protect the stainless-steel finish during shipping. This film MUST be removed prior to lighting the grill. Heat from the grill will melt the plastic to the metal making it very difficult to remove and will produce odors and potentially harmful fumes.

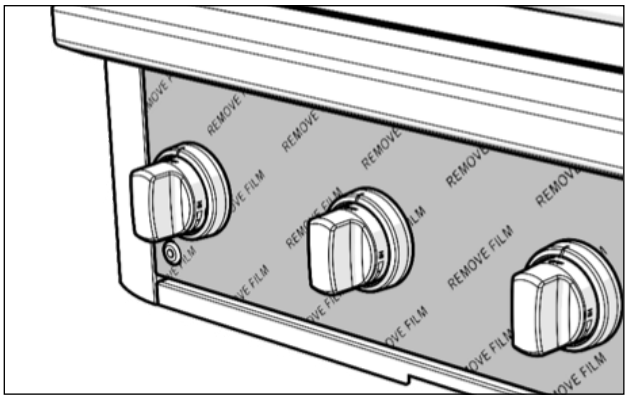

ASSEMBLE THE GRILL

Remove all packaging materials from the inside of the grill. Check that the burners are fully seated in place with the burner's intake tube centered on the valve and the burner's rear mounting pegs fully in the rear mounting holes.

1 Install Heat Dividers

Unwrap the heat dividers included with the grill and place a divider on the pins between each of the burners. There will be one less heat divider than the number of burners.

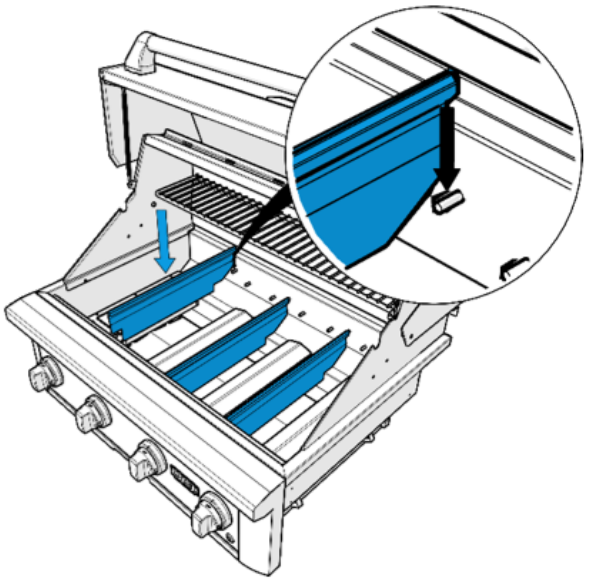

2 Install Briquette Trays

Remove packaging materials from the briquette trays and lower them onto the two front and two back pins above each burner.

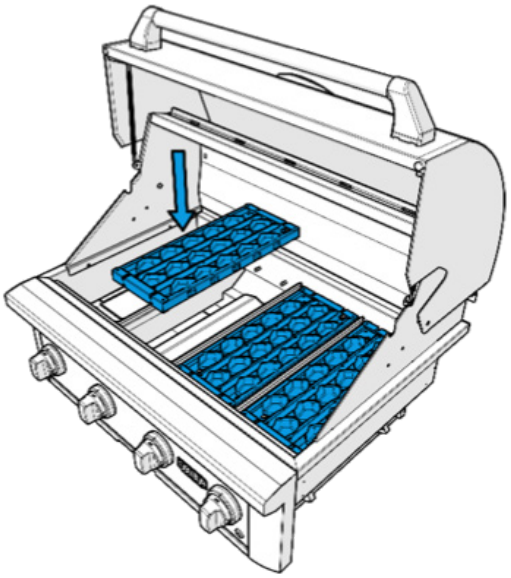

3 Install Grill Grates

Place the grill grates on the shelf above the burners.

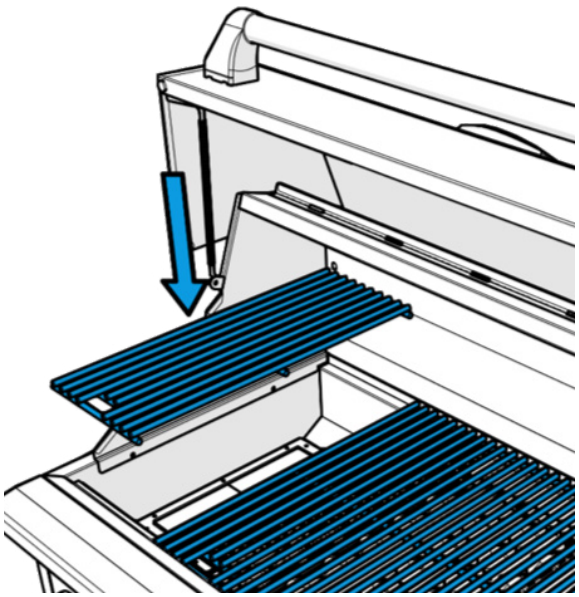

4 Install Warming Rack

Slide the warming rack into the two holes at the back of the grill.

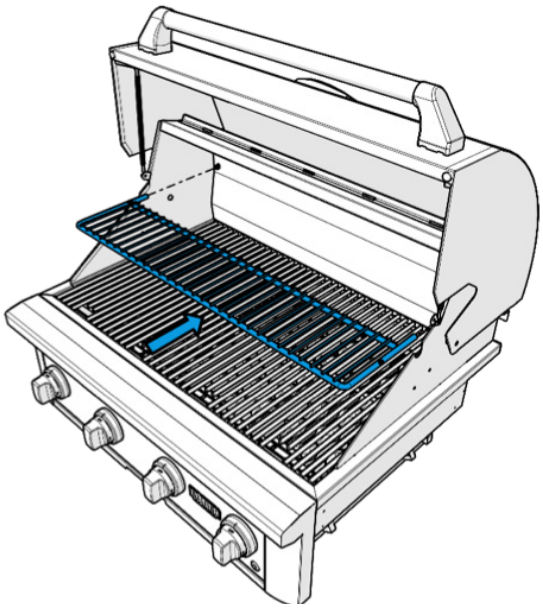

BUILT-IN INSTALLATIONS

IMPORTANT: Professional Installation Required

Built-in installations should be designed and built for fixed gas piping. Joints and connections should be soldered and must meet local and national building and gas codes. Your gas professional should have installed a certified gas pressure regulator and an accessible manual shutoff valve and may have installed a pressure regulator to step down the gas utilities incoming pressure to a safe residential pressure. If so, this regulator should be upstream of the installed manual shutoff valve. Do not remove or bypass this regulator. Your Ember grill comes with a pressure regulator to keep the gas pressure within safe operating limits. Consult with your gas professional to see if this additional regulator is needed. Wildfire Outdoor Living recommends using the pressure regulator included with your grill.

Your Ember grill comes with a gas flex line and brass connector for connecting to the installed fixed gas line. The brass connector on the grill's flex line is a female flare, or compression-style, connector. Only connect a male flare connector to it. The gas professional may have installed a pipe thread connector on the end of the fixed gas line. If so, you will need a connector adapter to change from the pipe thread to flare threads. The gas line may also be larger than the grill's 3/8" flare connector. In this case, an adapter that converts from the pipe's larger size pipe threads to 3/8" flare will be needed. This connection should be performed by a gas professional as the pipe threads should be properly tightened and sealed.

1. **Prepare the Grill** – Ensure all burner control knobs are in the "OFF" position before beginning installation.

2. **Close Shut-Off Valve** – Ensure that the installed shut-off valve on the gas supply line is in the closed position. For a ball valve, the closed position is when the handle is perpendicular to the gas pipe. For a quarter-turn valve, the closed position is when the knob is turned fully clockwise. Thread-closing valves, such as a gate or globe valve, typically have a round knob that you tun clockwise to close.

3. **Attach the Regulator** – The supplied 3/8" regulator includes a directional flow arrow indicating the proper gas flow direction (arrow must point toward the grill). Connect a 3/8" MIP fitting to the regulators "in" side and attach your approved connection hose.

4. **Connect the Hose** – Use only 1/2" stainless steel corrugated hoses for flexibility and long-term durability. Ensure the hose length and flow capacity meet your installation needs. Use a 1/2" to 3/8" reducer to connect to the regulator. Connect the opposite end of the hose securely to the manual shut-off valve.

5. **Leak Testing** – After all connections are completed, check for leaks using a soap and water solution. Never use an open flame for leak detection. If bubbles form, tighten fittings and re-test until no bubbles appear.

CONNECTING GAS

Natural Gas

IMPORTANT: Professional Installation Required

Ember Natural Gas (NG) grills are designed to operate using natural gas only, at a pressure regulated at 4 inches (101.6 mm) of water column (WC). Your Ember grill includes the proper regulator for the intended type of gas. The type of gas can be found on the product label on the side of the grill.

The incoming gas supply to the regulator should have a pressure in the range of 3.5" WC – 10.5" WC (1/8 psi – 3/8 psi) for optimal performance. If the incoming pressure is lower than 3.5" WC, your grill may not reach its maximum performance. The maximum pressure of the gas supply coming into the grill's regulator should not exceed 14" WC (1/2 psi). If your gas supply exceeds this, your gas professional should install a regulator on the supply line to step the pressure down to 7" WC before connecting the grill's included regulator.

The grill's included regulator should be connected directly to the grill's gas flex line and downstream of the gas supply's shut-off valve. An arrow on the regulator indicates the direction of gas flow which should point towards the grill's gas flex line.

Liability Disclaimer: Wildfire Outdoor Living is not responsible for the selection, performance, or workmanship of any contractor or installer connecting the natural gas supply to this appliance. Always confirm that all installation work complies with local codes and gas authority regulations.

Before starting the grill, verify the following:

1. **Prepare the Grill** – Ensure all burner control knobs are in the "OFF" position before beginning installation.

2. **Install Regulator and Shut-Off Valve** – Every Ember Natural Gas grill must include both a pressure regulator and a manual shut-off valve on the gas supply line.

3. **Seal Pipe Threads** – Apply an outdoor-rated, gas-approved thread sealant to all pipe threads. Do not use sealant on flare connections, these are designed to seal without additional material.

4. **Attach the Regulator** – The supplied 3/8" regulator includes a directional flow arrow indicating the proper gas flow direction (arrow must point toward the grill). Connect a 3/8" MIP fitting to the regulators "in" side and attach your approved connection hose.

5. **Connect the Hose** – Use only 1/2" stainless steel corrugated hoses for flexibility and long-term durability. Ensure the hose length and flow capacity meet your installation needs. Use a 1/2" to 3/8" reducer when connecting to the regulator. Connect the opposite end of the hose securely to the manual shut-off valve.

5. **Leak Testing** – After all connections are completed, check for leaks using a soap and water solution. See LEAK TESTING section below for details.

WARNING

Only use the fuel type listed on the rating plate. DO NOT attempt to operate the grill with a different type of gas. All natural gas connections must be performed by a licensed contractor or a qualified representative from your local gas company. Improper installation may result in gas leaks, fire, or personal injury.

Liquid Propane (LP)

Ember grills configured for Liquid Propane (LP) come equipped with a factory-supplied LP hose and regulator assembly designed to connect directly to a standard 20 lb., Type 1 LP cylinder. All fittings required for connection are included with your grill.

Cylinder Specifications

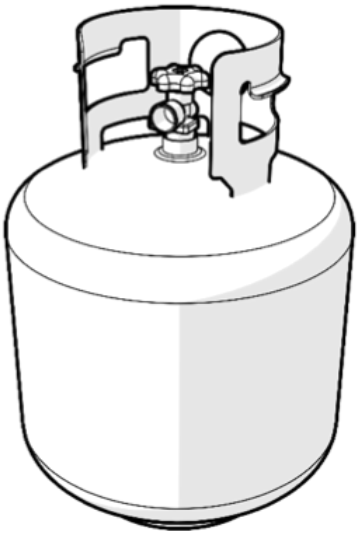

- An LP gas supply cylinder used with this grill must be approximately 12 inches diameter and 18 inches high. The maximum fuel capacity is 80% and is approximately 20 pounds of propane.
- The LP cylinder must have a shut-off valve (see image) terminating in a Type 1 LP threaded outlet.
- NOTE: A Type 1 compatible cylinder with a Type 1 cylinder valve has a back-check valve which does not permit gas flow, until a positive seal has been obtained.
- The cylinder must be arranged for vapor withdrawal. It must also include a collar to protect the cylinder valve. A safety relief device having direct communication with the vapor space of cylinder must be provided. This will expel high pressure gas if the cylinder is overfilled or overheated which could result in fire or explosion.
- All LP gas cylinders used with this appliance shall be constructed and marked in accordance with the specifications for LP gas cylinders by the U. S. Department of Transportation (DOT) or the National Standard of Canada, CAN/CSA-B339, Cylinders, Spheres and Tubes for Transportation of Dangerous Goods; and Commission, as applicable; and shall be provided with a listed overfilling prevention device.
- Read all labels on the LP Gas Supply Cylinder.
- New cylinders are always shipped empty for safety.
- Allow only qualified LP gas dealers to fill or repair your L.P. gas supply cylinder. Inform the gas dealer if it is a new or used cylinder to be filled. After filling, have the gas dealer check for leaks and to see that the relief valve remains effective and in good repair.

Pressure Regulator and Hose (included with grill)

The Type 1 connection system has the following features:

- The system will not allow gas to flow until a positive connection has been made.
- The system has a thermal element that will shut off the flow of gas in the event of a fire.
- The system has a flow limiting device which, when activated, will limit the flow of gas to 10 cubic feet per hour.

CAUTION

The cylinder control valve must be turned off before any connection is made or removed.

Connecting Liquid Propane (LP)

1. The propane tank's shutoff valve should be in the closed or "OFF" position. If not, turn the knob clockwise until it stops.
2. Make sure all of the grill's burner valves are in the "OFF" position.
3. Connect the pressure regulator to the gas flex line on the side of the grill. The connectors are gas flare fittings; do not use thread compound or sealant. The compression of the fittings seals the connection.
4. Insert the regulator inlet into the propane tank's valve. Hand-tighten the connector, do not use tools.
5. Turn the propane tank's shutoff valve to the open or "ON" position.
6. Turn the grill's burner control knob to the "HIGH" position. Push and hold the knob for about 5 – 10 seconds to allow the air in the system to purge before attempting to light the burners.
7. Before lighting the grill's burners, perform a leak test on the propane tank connection.

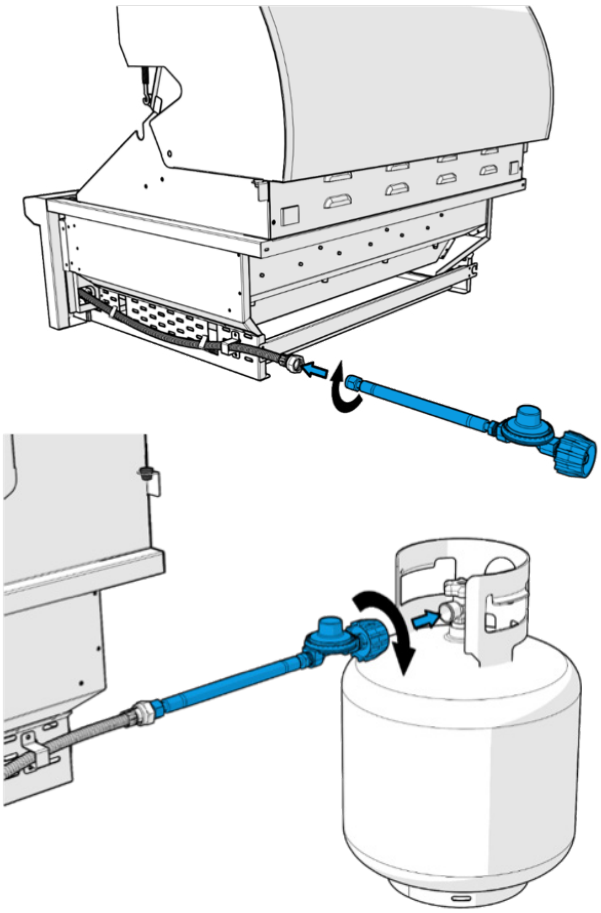

Inspect the regulator hose. DO NOT use if there is any wear, cuts, holes, loose end caps, or other damage.

Repeat the inspection before each use; additionally, look for signs of wear such as cracking or abrasion marks. These can be signs that the hose is rubbing against something or is breaking down due to extreme weather.

Contact your Wildfire dealer or Wildfire Customer Service directly for a replacement regulator.

Test for Leaks

- Never turn on the grill without the correct pressure regulator in place.
- Always perform a leak test on the regulator and gas connections before operating the grill.
- Never use or operate the grill until all connections have been leak-tested and confirmed safe.
- Never smoke while leak testing.
- Never leak test with an open. Extinguish or move candles, gas lanterns, Tiki torches or other open flames to a safe distance from the grill and gas lines. Turn off other gas appliances near the grill.

DANGER

Failure to follow ventilation requirements could result in fire, property damage, personal injury, or death.

To perform a leak test:

1. Mix a solution of mild detergent or liquid soap and water in a spray bottle.
2. Turn all grill control knobs to OFF.
3. Ensure all gas connections are tight and secure.
4. Completely open the shut-off valve. If you hear a rushing sound or smell gas, close the shut-off valve immediately. This indicates that there is a bad gas connection or a leak in the gas line or one of the gas components. Contact your gas professional to have the system checked or corrected. If your gas professional finds that there is an issue with the grill's included regulator or any of the gas components in the grill, contact Wildfire Customer Service at 602-344-4840 for instructions and replacement parts.
5. If there is no rushing sound or gas smell, verify that there are no leaks by spraying all gas connections with the soapy solution. If "growing" bubbles appear, there is a leak at that connection. Close the shut-off valve immediately and retighten the connection. Open the shut-off valve. If the bubbles continue, close the valve and contact Wildfire Customer Service at 602-344-4840. Do not try to disassemble or repair the regulator or gas components of the grill.

CAUTION

During gas pressure testing:

- The grill and its shutoff valve, if applicable, must be disconnected from the gas supply piping system if test pressures may be in excess of ½ psi (3.5 kPa); or,
- The grill must be isolated from the gas supply piping system by closing its manual shutoff valve during the test for pressures equal to or less than ½ psi (3.5 kPa).

CONNECTING THE TRANSFORMER

The Ember grill may be used without an electrical connection; the burners and ignition do not need electricity. However, to use the grill lights and to turn on the control knob LED light rings, the supplied transformer must be connected to the grill and to an electrical outlet. The outlet must be an outdoor-rated, three-prong grounded AC outlet. It is recommended to use a GFCI outlet to prevent electric shock in wet environments.

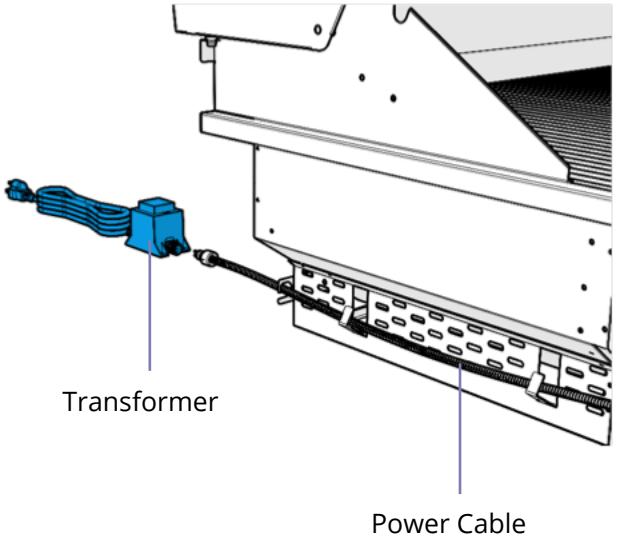

Align the pins on the grill's power cable with the contacts on the transformer. Push the cable all the way in and secure by hand tightening.

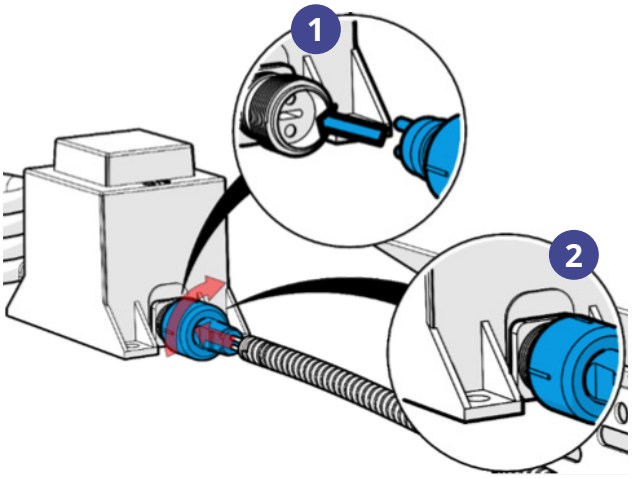

HOW TO USE YOUR GRILL

FIRST TIME USE

Before cooking on your grill for the first time, it is recommended to run the grill without food long enough to burn off any trace debris or oils that may cause odors or alter the food's taste. Ignite the grill, turn all control knobs to HI, and close the grill's hood. Run the grill until odors have begun to subside (approximately 5 minutes). The grill is now ready for cooking. See following sections for details on lighting and operating the grill.

CONTROL KNOBS

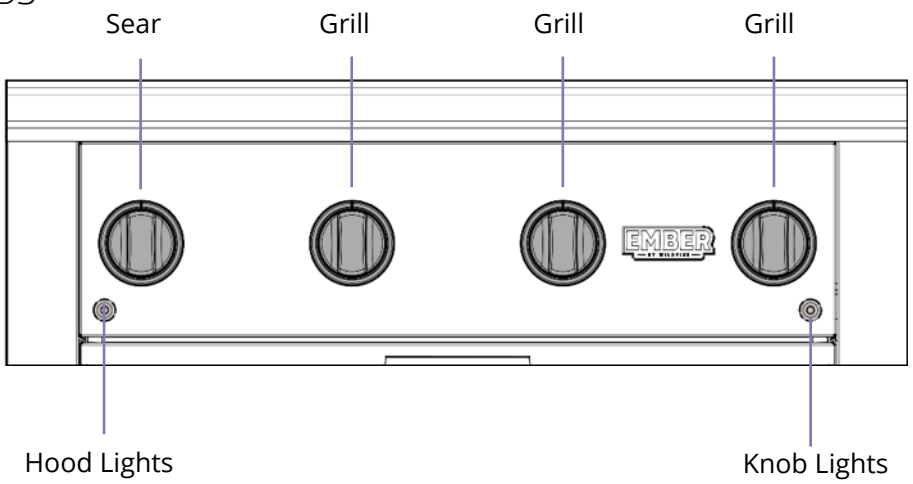

LIGHTING THE GRILL

Push and hold the knob while turning it counterclockwise past "HI." You should feel and hear a click which is the ignitor creating a spark. If the grill doesn't light, turn the knob back to the "OFF" position. Push and hold the knob longer to release more gas before turning past "HI" to light. Continue to hold the knob in for 5 – 10 seconds to fully light the burner. You should see flames coming out of all of the burner holes. See the TROUBLESHOOTING section of this manual. Each burner ignites individually. The three Grill burners can be used individually or together.

OFF Position

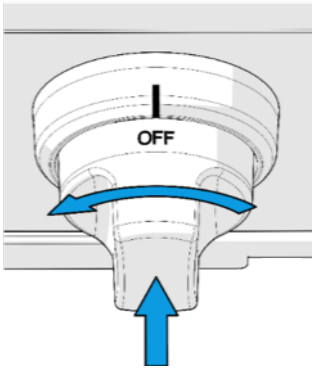

Push & Hold

IGNITE Position

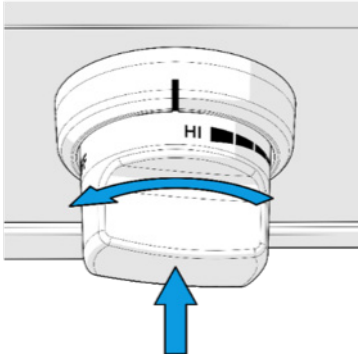

Push & Hold

Lighting the Grill Manually

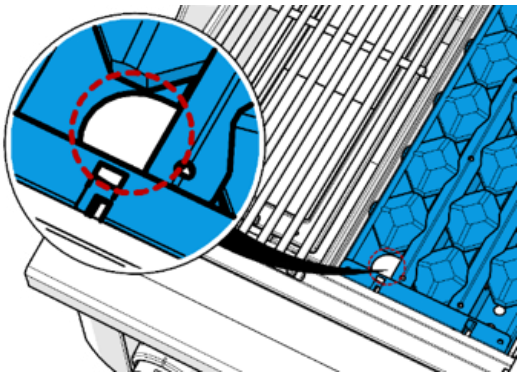

If a burner is not lighting by the method above, you can manually light the grill. Light a long fireplace match and hold it just inside the hole in the ceramic briquette tray. Push the control knob and turn to just before “HI”. Continue to push and hold the knob for 5 – 10 seconds until the burner fully lights. Keep your hands and face a safe distance from the burner while lighting.

Sear Burner



The procedure for lighting the Sear burner is the same; however, you may need to push and hold the knob for up to 20 seconds before turning past “HI” to fill the sear burner with gas. Once you hear the “click” of the ignitor, you may have to continue to push and hold the knob for up to another 20 seconds for the ceramic tiles inside the burner to reach a minimum temperature to burn the air/fuel mixture. The Sear burner uses infrared technology; therefore, you may not see individual flames while igniting. Instead, these burners will begin to glow a dull orange which grows to a bright red as they heat up. Allow the burner to heat to temperature. It should be glowing a bright orange across the entire burner.

COOKING ON THE GRILL

Your Ember grill comes from the factory pre-tuned for optimal performance. However, factors unique to your location and installation can affect this performance and adjustments may need to be made to bring the grill back to its peak performance. These factors include gas pressure, the size and length of the gas lines, elevation, temperature and even wind conditions. This section provides information to help you in the event your grill isn’t performing up to expectation.

Optimal Flame

Flame Height

The height of the flame can depend on the gas type, pressure, and the gas-to-air mixture. If the flame height is too low, the gas pressure may be too low. If the flame height is too high, the gas pressure may be too high. Verify the gas pressure meets the requirements in the GAS REQUIREMENTS section. If after adjusting the gas pressure, the flames are not blue, see next section.

Flame Color

The ideal flame for grilling will be blue with little to no yellow or orange tip. An optimal flame may occasionally flicker yellow or orange due to fluctuations in gas pressure or airflow into the burner. If the flame has too much yellow or orange flame, there isn’t enough air mixing with the gas. The air shutter may need adjusted. See Adjusting the Air Shutter in the MAINTAINING YOUR GRILL section of this manual.

COOKING METHODS

There are different methods of cooking depending on the type of food and style of cuisine. Choosing the best method will bring the best results.

Direct Cooking

Direct cooking over an open flame is ideal for steaks, burgers, and vegetables. Place the food directly on the grill grate and set the burner to medium-high to high heat (500°F or higher will sear the outside of meats and seal in flavor).

Indirect Cooking

Indirect Cooking uses heated air to slowly cook delicate or larger foods without burning them, similar to cooking in an oven. Place the food on the grill grate and leave the burner under the grate off. Turn one or more of the other burners on and adjust the knob to keep the heat between about 250°F - 350°F. Close the hood while cooking and turn the food over periodically for even cooking.

Searing

For best results when searing meats. Turn all main grilling burners to HI, close the lid, and allow the grill to reach maximum temperature. Then place the meat directly on the center of the grill grate.

For even better results, use the included infrared Sear Burner. The Sear Burner reaches a higher temperature than the grilling burners in much shorter time.

Warming Rack

The grills included warming rack can be used to keep foods warm while cooking other food on the grill grates; or can be used to slow cook vegetables. It can also be used to heat up delicate foods such as bread.

COOKING TIPS

Managing Flare-ups

The ceramic briquette tray is designed to help reduce flare-ups by creating a barrier between the burners and food drippings. As grease and juices fall onto the heated ceramic briquettes, they are vaporized rather than igniting directly on the burners, resulting in more even heat distribution and enhanced cooking performance. If you begin to notice excessive flare-ups flip the ceramic briquette trays over, when safe to do so, and burn off excess debris for 10 minutes on high. Wait until completely cool, then flip over again.

Tips for Minimizing Flare-Ups

- Preheat properly. Allow the grill to preheat with the lid closed so the ceramic briquettes reach cooking temperature before food is placed on the cooking surface.
- Trim excess fat. Foods with high fat content can produce more drippings, increasing the likelihood of flare-ups.
- Cook with the lid closed. Keeping the lid closed helps regulate airflow and reduces oxygen available to fuel flare-ups.
- Monitor greasy foods. When grilling fatty cuts of meat, check periodically and adjust burner settings as needed.
- Clean regularly. Excess grease buildup on the briquette tray, cooking grates, or other interior surfaces can contribute to flare-ups.

If a Flare-Up Occurs

1. Close the lid, it will help limit oxygen and can quickly reduce the flare-up.
2. Turn the burner control knobs to a lower heat setting.
3. Move food away from the affected area if necessary.
4. Once the flare-up subsides, resume cooking at a lower temperature.

Safe Cooking Temperatures

Always use a food thermometer to verify that food has reached a safe internal temperature. Insert the thermometer into the thickest part of the food, avoiding bone, fat, or gristle.

FOOD TYPE	USDA RECOMMENDED MINIMUM INTERNAL TEMPERATURE	REST TIME
Beef, Pork, Veal, and Lamb Steaks, Chops, and Roasts	145°F (63°C)	3 minutes
Fish and Seafood	145°F (63°C)	None required
Ground Beef, Pork, Veal, and Lamb	160°F (71°C)	None required
Poultry	165°F (74°C)	None required
Pork	145°F (63°C)	3 minutes

IMPORTANT: Color alone is not a reliable indicator of doneness. Always verify the internal temperature with a calibrated food thermometer before serving.

HOW TO USE YOUR ACCESSORIES

DROP-IN GRIDDLE

Expand your Ember grill's versatility with an optional 12" Drop-In Griddle, designed to expand the capabilities of your grill, without the need to purchase a griddle separately. Perfect for cooking breakfast favorites, stir-fry, seafood, and other delicate foods that benefit from a flat cooking surface. Constructed from durable stainless steel, the griddle provides even heat distribution for consistent cooking results and features a removable grease tray for easy cleanup.

Installation is simple, remove two cooking grates and lower the griddle into place on the same support ledge. The griddle is heated by the grill's existing burners, allowing you to quickly transform part of your grill into a flat-top cooking surface.

Important: Never install the Drop-In Griddle over the Sear Burner. The extreme temperatures produced by the Sear Burner may damage the griddle.

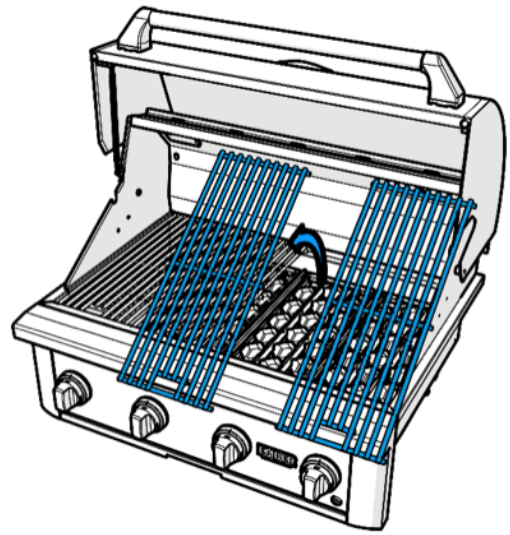

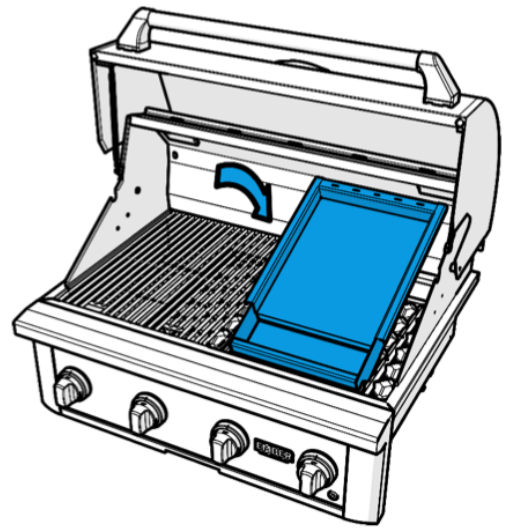

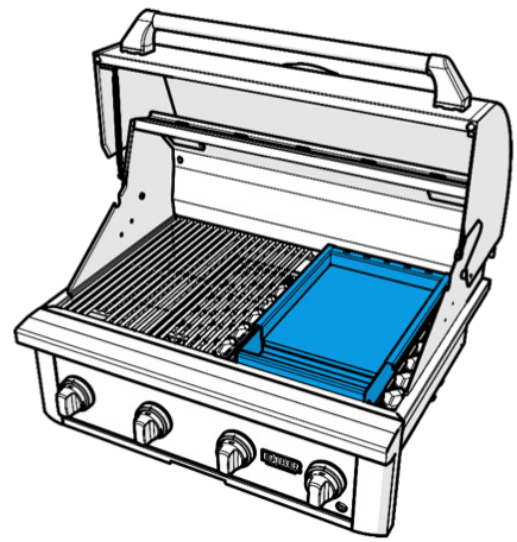

MAINTAINING YOUR GRILL

MAINTENANCE GUIDELINES

- Keep outdoor gas appliance areas clear and free from combustible materials, gasoline and other flammable vapors and liquids.
- Do not obstruct the flow of combustion and ventilation air.
- Keep the ventilation opening(s) of the cylinder enclosure free and clear from debris.
- Visually check burner flames. Burner flames should be blue and stable with very few yellow tips or excessive noise. If any of these conditions occur, turn grill off and call our customer service line.
- Clean outdoor cooking gas appliance, including special surfaces, with recommended cleaning agents, if necessary.
- Check and clean burner for insects and insect nests. A clogged tube can lead to a fire beneath the grill.

MATERIALS

Stainless Steel

It is a common misconception that stainless steel will maintain its original factory shine with little to no maintenance. Stainless steel will not stain, discolor, corrode or rust as fast as other types of steel, but it is not fully stain or weatherproof. If it is not properly maintained, all grades of stainless steel can face surface discoloration, corrosion and eventually rust. Any stainless steel that is exposed to outdoor elements will require attention and care throughout its life to ensure that it keeps its shine and structural integrity.

Cleaning Stainless Steel

1. Allow the grill to cool fully before cleaning or polishing stainless steel. Do not clean or polish your grill's stainless steel when the grill is in operation or still hot.
2. To clean the stainless steel, wash off all the dirt and debris with warm water. If you have tough spots to clean, a third-party degreaser product can be used.
3. Next, rinse and dry the steel thoroughly with a clean towel. Do not allow the steel to air dry as the standing water can cause surface discoloration.
4. The last step is to protect the unit with a quality stainless steel polish. There are several polishes on the market that will help keep your grill protected from the elements for a longer period of time. Most of these polishes are toxic, so only use these on the exterior of the grill. Follow instructions provided on any third-party polish products. Do not use such products on cooking grates or Ceramic Briquette Trays.
    a. Apply the polish to a clean paper towel and wipe with the direction of the grain in the stainless steel.
    b. There should be no excess liquid on the surface but it is acceptable for it to be a little oily, as that will dissipate.
5. If your grill has developed surface discoloration or surface rust, clean the unit as stated above and use a quality polish to remove or reduce the spots. Follow instructions provided on any polish products. Wildfire does not insure or guarantee the performance of or results from such products.

Designer Finishes

The grills control knobs and hood handle, in both the standard finish and available Designer Finishes, have a protective coating that can withstand outdoor environments.

Cleaning the Knobs and Handle

1. Harsh cleaning solutions and abrasive cloths are not needed and should not be used to clean the finish. Although the finish is scratch resistant, harsh cleaning materials can scratch the protective coating making it less shiny.
2. To clean the knobs and handle, use a mild detergent and warm water, and a microfiber lint-free cloth.

MAINTAINING YOUR GRILL

Environmental Factors That Can Affect Your Grill

There are several typical causes for surface discoloration and corrosion on your stainless-steel outdoor equipment:

- Mortar (which contains lime) from the island assembly process has rested on the unit for a prolonged period.
- Pool chemicals were splashed onto the grill (chlorine and acid will cause problems quickly).
- Hard water from sprinklers (chlorine in the water) was allowed to sit on the unit.
- Salt from the ocean air/water was allowed to rest upon the grill for a prolonged period before being cleaned.
- Dust, or rust, from other metals found its way onto the grill and was left on for an extended period.
- Organic matters (such as certain types of food) might have gotten onto the surface of the grill, and it was then covered. With high humidity and low oxygen, corrosion will start to take place.
- Sprays and cleaning solutions containing alkaline, lime, acid, salt, etc. might have been left on the grill surface un-dried.
- Failure to clean or polish your grill in accordance with the instructions above.

Ways To Avoid Rust on Your Grill

- Protect your investment with a Ember Grill Cover. This will provide the protection needed to keep contaminants off of the surface.
- When installing the unit, make sure to keep the unit covered when any masonry work is being performed. If any mortar or dust does come into contact with the stainless, make sure to wipe it off as soon as possible and use a stainless-steel polish immediately afterward.
- Position your grill away from areas that can receive water splashes from a pool or hot tub.
- Do not store pool chemicals in your island or island cabinets.

MAINTAINING YOUR GRILL

Cleaning the Drip Tray

The drip tray located below the grill should be cleaned periodically to prevent buildup of grease and debris.

NOTE: Allow the drip tray to cool completely before attempting to clean.

IMPORTANT: Do not leave the grill outside during inclement weather unless it is covered (cover sold separately). Rainwater can collect inside the grill, the grill cart, or the drip tray if left uncovered. If the drip tray is not cleaned after use and the grill is left uncovered, the drip tray will fill with water causing grease and water to spill into the grill cart. We recommend cleaning and storing the drip tray after every use.

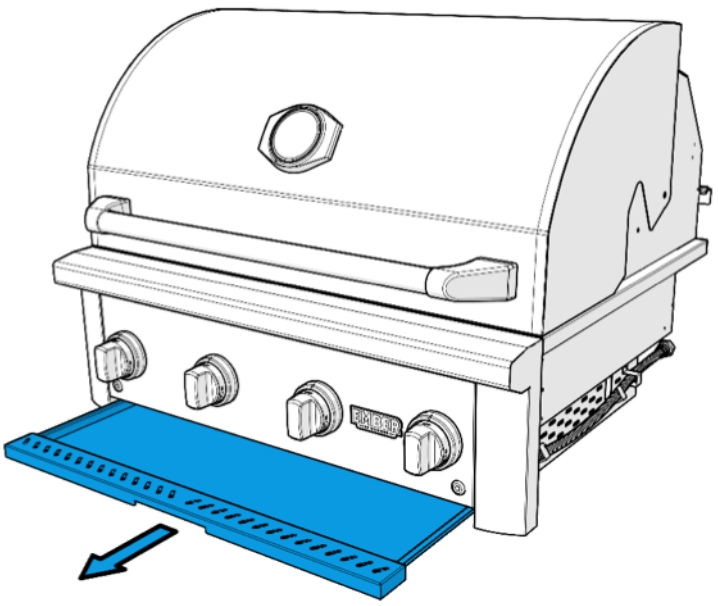

CLEANING THE INTERIOR

Cleaning the Cooking Grates

The cooking grates can be cleaned immediately after cooking, after turning off the grill; however, exercise extreme caution because the grates will be very hot if you clean them immediately after cooking. Wear a barbecue mitt and scrub the cooking grates with a damp cloth. If the grill is allowed to cool down, cleaning the grates will be easier if removed from the grill and cleaned with a mild detergent.

Cleaning the Ceramic Briquettes

It is not necessary to clean the ceramic briquettes. Grease coated on the briquettes provides flavor to the food. Do not pour water on the briquettes while hot as they will likely crack and break. If you are experiencing flare ups due to excessive grease build-up on the briquettes or trays, turn the trays over and put the burners on HI. This will burn off excess grease and food particles. If there is still too much grease or food, allow the briquettes to cool. Use a wire brush to remove stubborn burned on cooking residue. Dry the briquette trays thoroughly before reinstalling them in the grill.

Cleaning the Burners

IMPORTANT: Gas control knobs should be in the "OFF" position and fuel line/source should be disconnected. To reduce the chance of a flashback, the procedure below should be followed at least once a month or when your grill has not been used for an extended period of time.

Main Grilling Burners

1. Clean main burners only when cool.
2. Remove your main burners from the grill by removing the cotter pins holding the burner down in the back and carefully lifting each burner up and away from the gas valve orifice. You may have to slide the grill out of the island or cart to gain access to the cotter pins.
3. Wire brush entire outer surface of burner to remove food debris and dirt. Clean any clogged ports with a stiff wire such as an open paper clip.
4. Inspect the burner for damage (cracks or holes) and if damage is found, order and install a new burner.
5. After re-installation, check that gas valve orifices are correctly placed inside ends of burner tubes. Also check position of the spark electrode.

MAINTAINING YOUR GRILL

Sear Burner

Sear burners are made from ceramic and emit gas in a honeycomb pattern that is almost impossible to see. However, these burners get exceptionally hot and can be exceptionally easy to damage. To clean sear burners:

1. Remove all large pieces of food from the top of the sear burner.
2. Turn the sear burner on high and let the temperature do the work.
3. Do not leave the grill unattended while doing this as you will want to make sure no excessive flare ups occur.
4. Once all excess grease has been burned off, you are ready to go! An easy way to keep your sear burner from getting dirty is to allow it to run for a few minutes after you are done cooking so that you do not have to re-heat your grill.

IMPORTANT: Never cook over sear burner when the sear burner is off as drippings from the food will clog the burner.

CHANGING AN INTERIOR LIGHT BULB

1 Remove the screw holding the housing to the grill and pull the housing away just enough to access the side of the housing.

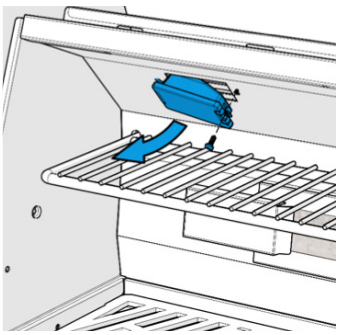

2 Use a flat screwdriver or other thin object to push in the tab on the side of the housing.

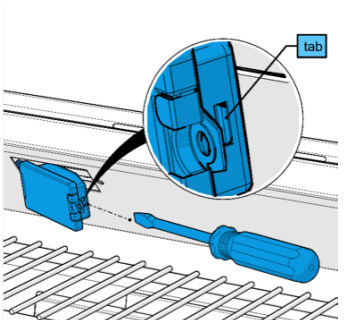

3 While pushing in on the tab, pull glass lens away from the housing.

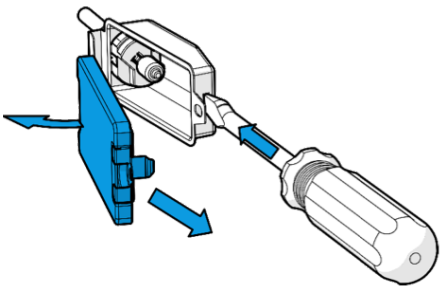

4 Pull the bulb straight out of the socket.

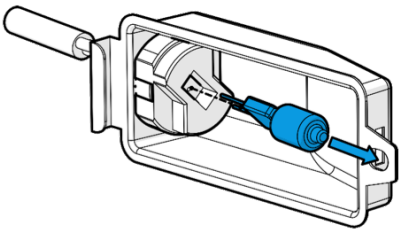

5 Reverse the steps to install the new bulb.

MAINTAINING YOUR GRILL

REPLACING A CONTROL KNOB AND BASE

1. Pull the Knob straight away from the grill.

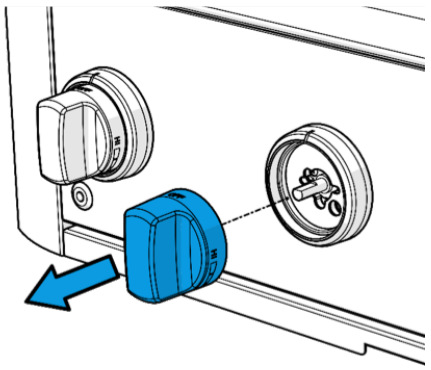

2. Remove two screws holding the base.

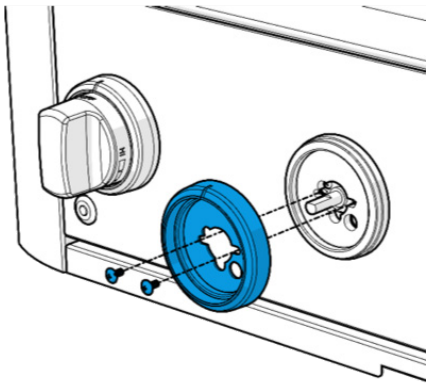

3. Reverse steps to install the new Knob and Base.

REPLACING A LIGHT RING

1. Remove the Knob and Base, see previous section.

2. The two screws holding the Base to the grill also hold the Light Ring. Slowly pull the Light Ring away from the grill with one hand. With the other hand, gently pull the cable out from the grill. Note, the connector may get caught on the edge of the opening.

   Do not pull on the light ring itself as it may pull out the wires from the back of the ring. Until the new light ring is in place and working, it cannot be fully determined that the old ring is bad. Therefore, it is important that the wires aren't damaged.

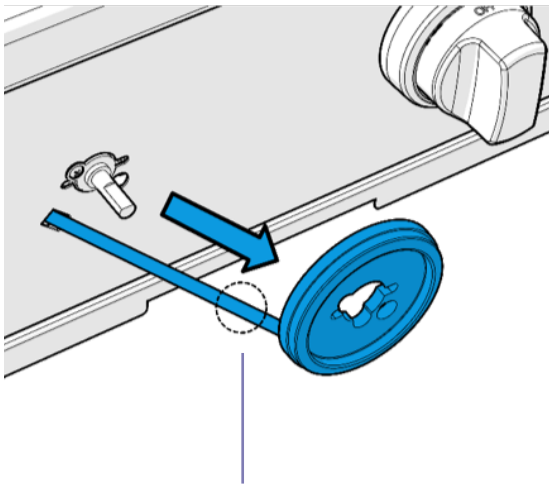

3. Disconnect by pulling the connectors straight apart.

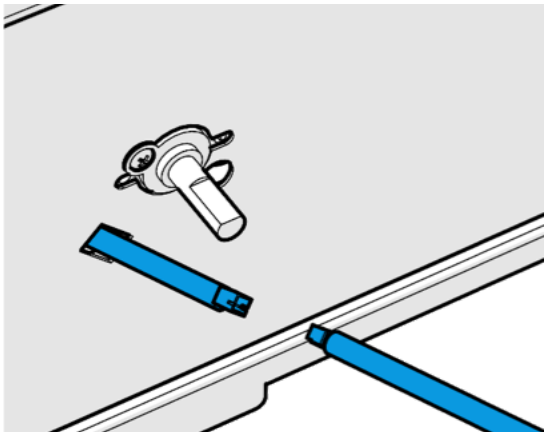

4. Reverse the steps to install the new LED Ring.

MAINTAINING YOUR GRILL

ADJUSTING A VALVE

The air shutter is factory-set for the gas type specified for your grill and normally does not require adjustment. If your grill has been converted from one gas type to another, or if the burner flames are not primarily blue with occasional small yellow tips, the air shutter may need to be adjusted to achieve the proper air-to-fuel mixture.

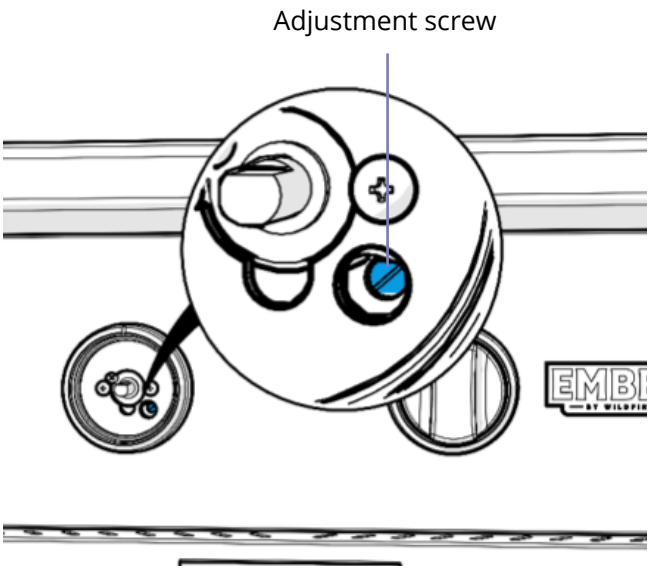

1. The valves come pre-adjusted. Adjusting a valve is only necessary if the burner flame is going out when the control knob is in its lowest position.
2. Remove the Knob. See REPLACING A CONTROL KNOB AND BASE above.
3. Turn the adjustment screw slowly until the flame height raises slightly.
4. Put the control knob back onto the valve stem.
5. Light the burner and let it heat up for several minutes.
6. Turn the control knob to its lowest position and watch the flames.
7. If the flames still go out, repeat the procedure to raise the flame height again.
8. If the flames continue to go out after a couple of adjustments, there is likely a different problem. See the TROUBLESHOOTING section of this manual.

ADJUSTING AN AIR SHUTTER

1. Remove burner. See REMOVING A GRILL BURNER section below.

2. Loosen but do not remove shutter screw.

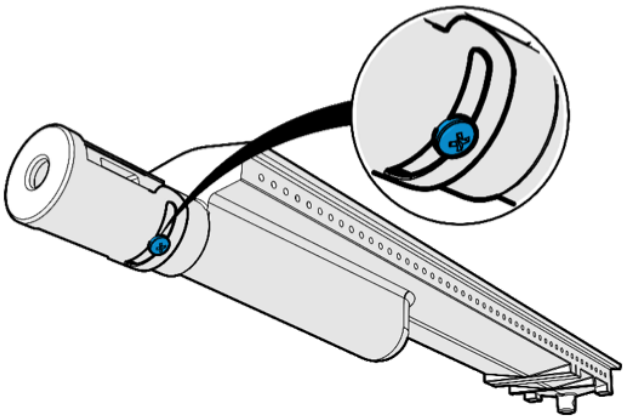

3. Rotate shutter and tighten screw.

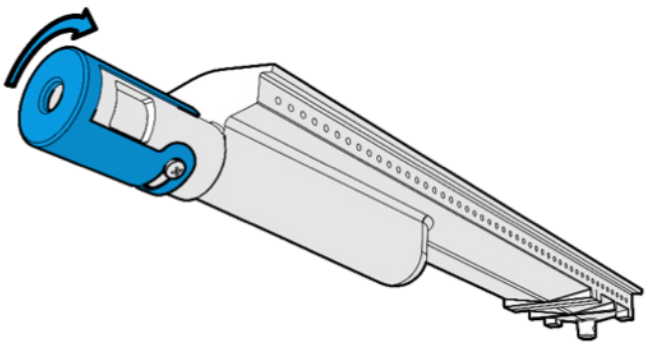

MAINTAINING YOUR GRILL

REPLACING A GRILL BURNER

The following procedure can be used to replace either an I-Burner or a Sear Burner. A Sear Burner can be placed on any one of the four valves but only ONE Sear Burner should be installed in the grill. Using multiple Sear Burners can overheat the grill and damage parts or create a hazard. Using multiple Sear Burners will void the grill's warranty.

1. Remove cotter pin.

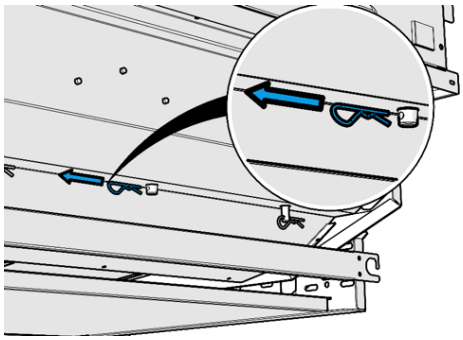

2. Remove grates, warming rack, and briquette tray.

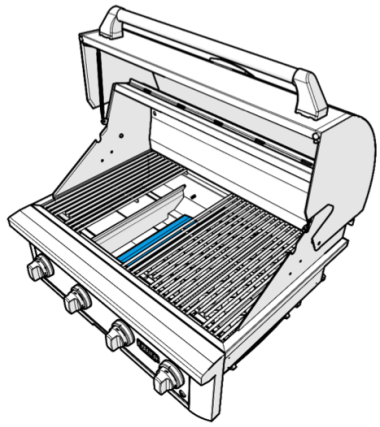

3. Lift up and rotate the burner.

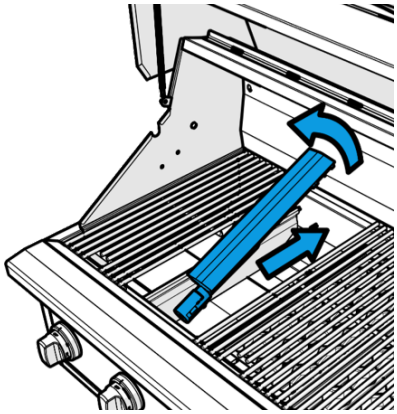

4. To install, slide the burner through the firewall cutout.

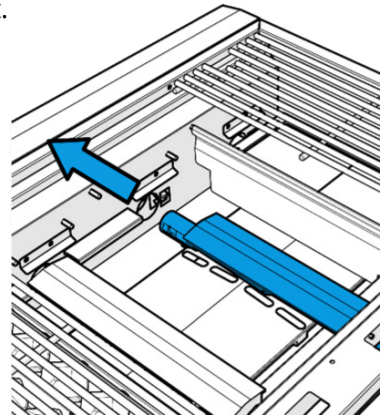

5. To install, slide the burner through the firewall cutout.

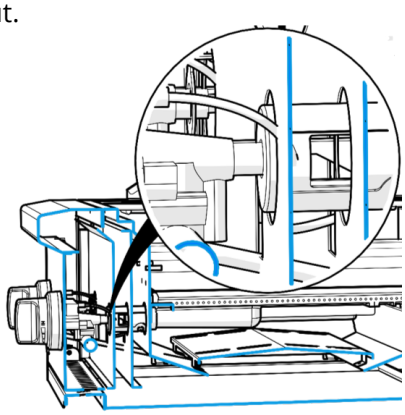

MAINTAINING YOUR GRILL

ANNUAL MAINTENANCE

Burning off excess food after every use will keep your grill ready for its next use. However, once a year you should thoroughly inspect the grill and give the entire grill a thorough cleaning to keep it in top operating condition.

1. Allow the grill to cool down completely. Shut off the gas supply at its source and disconnect the fuel line. Protect fuel line fitting.
2. Remove and clean the grill grates, ceramic briquette trays, and burners.
3. Remove the warming rack and wash with mild detergent and warm water.
4. Cover the gas valve orifices with a piece of aluminum foil.
5. Brush the inside and bottom of the grill with a stiff wire brush and wash down with a mild soap and warm water solution. Wash thoroughly and let dry.
6. Remove the aluminum foil from the orifices and check them for obstructions.
7. Check the electrode to make sure that a spark is being generated.
8. Reinstall the ceramic briquette trays, grill grates, and warming rack.
9. Reconnect the grill to the gas source and observe burner flame for correct operation.

IMPORTANT: You should NOT line the bottom of the grill housing with aluminum foil, sand or any other grease absorbent substance. Grease will not be able to drip into the drip tray, and a grease fire may occur.

TROUBLESHOOTING

PROBLEM	POTENTIAL CAUSE	SOLUTION
Burner won't light	• Out of fuel (LP)* or fuel disconnected	• Check that propane tank isn't empty or needs refilling. As the tank nears empty, the gas pressure inside the tank is too low to provide fuel to the grill. • Check that the gas regulator is securely connected to the propane tank and to the flex line of the grill.
	• Burner is not receiving fuel (NG)*	• Check that the gas safety valve is in the ON position. If in the OFF position, check for safety lock-out tags or signs before turning the valve ON. Check with local gas provider before proceeding. • Check that all gas lines are properly connected. Notify the gas provider if there are any indications of a disconnected or damaged line.
	• Gas type or pressure is incorrect	• The grill is configured for either liquid propane (LP) or natural gas (NG), the fuel type cannot be changed without converting the grill's orifice size and gas pressure regulator. Confirm the gas configuration of the grill by checking the label on the side of the grill. • Confirm the correct pressure for the grill's gas type, LP or NG. See the CONNECTING GAS section of this manual.
	• Gas leak in the system **⚠ DANGER**	• If the fuel source has been verified, there may be a leak in the fuel line. DO NOT attempt to light the grill until it is verified that there are NO leaks in the system. Check all lines and connections with soapy water, see TEST FOR LEAKS section in this manual. Turn off the gas supply and allow any built-up gas to dissipate before attempting to light again. If you smell gas after the grill has remained off, shut off the gas and contact Customer Service or your gas provider.
	• Burner's control valve is not functioning properly	• Check the operation of the valve by manually lighting the grill. See LIGHTING A BURNER MANUALLY section of this manual. If no flame is produced, check other valves. If other burners do not light, there is likely an issue with the fuel. See previous causes above. If other burners light, the valve may be malfunctioning. Contact Wildfire Customer Service. If the burner lights, go to next cause below.

*Liquid Propane (LP), Natural Gas (NG)

TROUBLESHOOTING

PROBLEM	POTENTIAL CAUSE	SOLUTION
Burner won't light *Continued*	• Ignitor is not functioning	• The ignitor is the part of the burner's control valve that creates a spark to ignite the fuel/air mixture inside the burner's inlet tube. Manually light the burner, see LIGHTING A BURNER MANUALLY section in this manual. If the burner lights, then the ignitor is likely not working. Contact Wildfire Customer Service. If the burner doesn't light, check the fuel source and lines. See previous causes above.
	• Burner holes are blocked	• If gas can be heard when pushing in the valve but the burner won't light, manually light the burner. See LIGHTING A BURNER MANUALLY section in this manual. If the burner doesn't light, check for food or grease build-up in the burner holes. See MAINTAINING YOUR GRILL section of this manual.
Burner goes out	• Out of fuel	• Check the fuel supply. See previous causes above.
	• Wind is blowing out the flames	• Strong wind can disrupt proper burning of the fuel/air mixture inside the burner tubes. Avoid grilling on very windy days and never leave a grill unattended. Locate the grill such that it is protected from strong gusts and normal prevailing wind direction is not towards the back of the grill. If possible, place a wind break a safe distance from the rear of the grill or relocate the grill.
	• Valve is set too low	• The LOW position of the valve is set at the factory to ensure the burner is supplied with enough fuel to stay lit under normal conditions. Variation in the environment, the condition and pressure of the fuel, and other factors can cause the fuel supply to dip below the minimum threshold to maintain a flame. The LOW setting can be adjusted on the valve to compensate for these conditions. See the ADJUSTING THE VALVE section in this manual.
Grill isn't hot enough	• Poor environmental conditions	• The grill will not reach its normal high temperature in cold climates or at high elevations. This is normal. • In cold weather, allow longer heat up time and cook with the hood closed. • The airflow to the grill may be obstructed which will cause incomplete burning of fuel. Ensure there is proper inlet and exhaust ventilation to the grill.

TROUBLESHOOTING

PROBLEM	POTENTIAL CAUSE	SOLUTION
Grill isn't hot enough *Continued*	• Gas pressure is too low	• If the gas pressure is too low, fuel is not flowing to the grill at a high enough rate to reach maximum temperature. This will show up as low flame height out of the burners. Check the fuel supply and pressure regulator.
	• Improper fuel/air mixture	• The burners may be getting too little or too much air mixed with the fuel. This can be seen in the color of the flames. The flames should be blue with an occasional small yellow tip. If the flame tips are orange, there isn't enough air to completely burn the fuel. Adjust the air intake of the burners, see **ADJUSTING AN AIR SHUTTER** section of this manual.
Grill is too hot	• Incorrect orifice size	• The gas orifice installed in the control valve may be the wrong size for the type of fuel. Ensure you are using only the type of fuel specified on the grill, see the label on the side of the grill. If you are unsure if the orifices were changed, the orifice size will need to be verified. Contact Customer Service.
LED light ring on control knob won't light up	• LED light ring isn't receiving power	• If none of the LED light rings on the control knobs turn on when pushing the ON/OFF button, there is likely an overall power issue. Check that the transformer is plugged into a properly grounded outlet and that the outlet has the required AC power output (120 VAC nominal in North America). Check the cable condition of the transformer and connection of the cable to the grill. Check that a GFCI outlet breaker hasn't tripped. Reset GFCI outlet. Try plugging the transformer into another power outlet. • If only one of the LED light rings isn't turning on, the cable may have come loose from the light ring during shipping or installation. Contact Customer Service.
	• ON/OFF switch isn't functioning	• The ON/OFF switch for the LED light rings illuminates when toggled ON. If the switch doesn't light up when pushed, then the switch isn't receiving power. Verify that the grill is receiving electrical power, see previous cause above. • The electrical connection to the switch may have come loose during shipping or installation. Check that the connector is fully seated on the back of the switch. Contact Customer Service. • The switch may be faulty. Contact Customer Service.

TROUBLESHOOTING

PROBLEM	POTENTIAL CAUSE	SOLUTION
LED light ring on control knob won't light up *Continued*	• LED light ring is faulty	• The LED light ring should last the lifetime of the grill and never need replaced. Contact Customer Service to determine if the LED light ring is faulty. • If one or more LED light rings have needed replaced multiple times, there may be an issue with the incoming power. The transformer smooths out normal incoming power fluctuation. However, it doesn't protect against power surges. If you are in an area that is prone to electrical storms or have inconsistent AC power, it is suggested that you install a proper surge protector and/or power line conditioner. Seek advice from a qualified electrician.
Halogen Hood lights won't light up	• Halogen light isn't receiving power	• Same solution as LED light ring, see above.
	• ON/OFF switch isn't functioning	• Same solution as LED light ring, see above.
	• Bulb is bad	• Change the bulb. See CHANGING A HALOGEN BULB section of this manual.
Excessive flare-ups while cooking	• Grease buildup on grill grates, briquette trays, or burners	• See the MAINTAINING YOUR GRILL section of this manual.
	• Grill temperature is too high	• Turn down the control knob to reduce the flame height and temperature. • Turn off one or more burners. • Cooking with the hood open will reduce the temperature and flare-ups.
	• Excessive fat on meat	• Trim excess fat from meats before grilling. • Move the meat away from directly over the flames while grilling and flipping the meat.

PARTS ORDERING

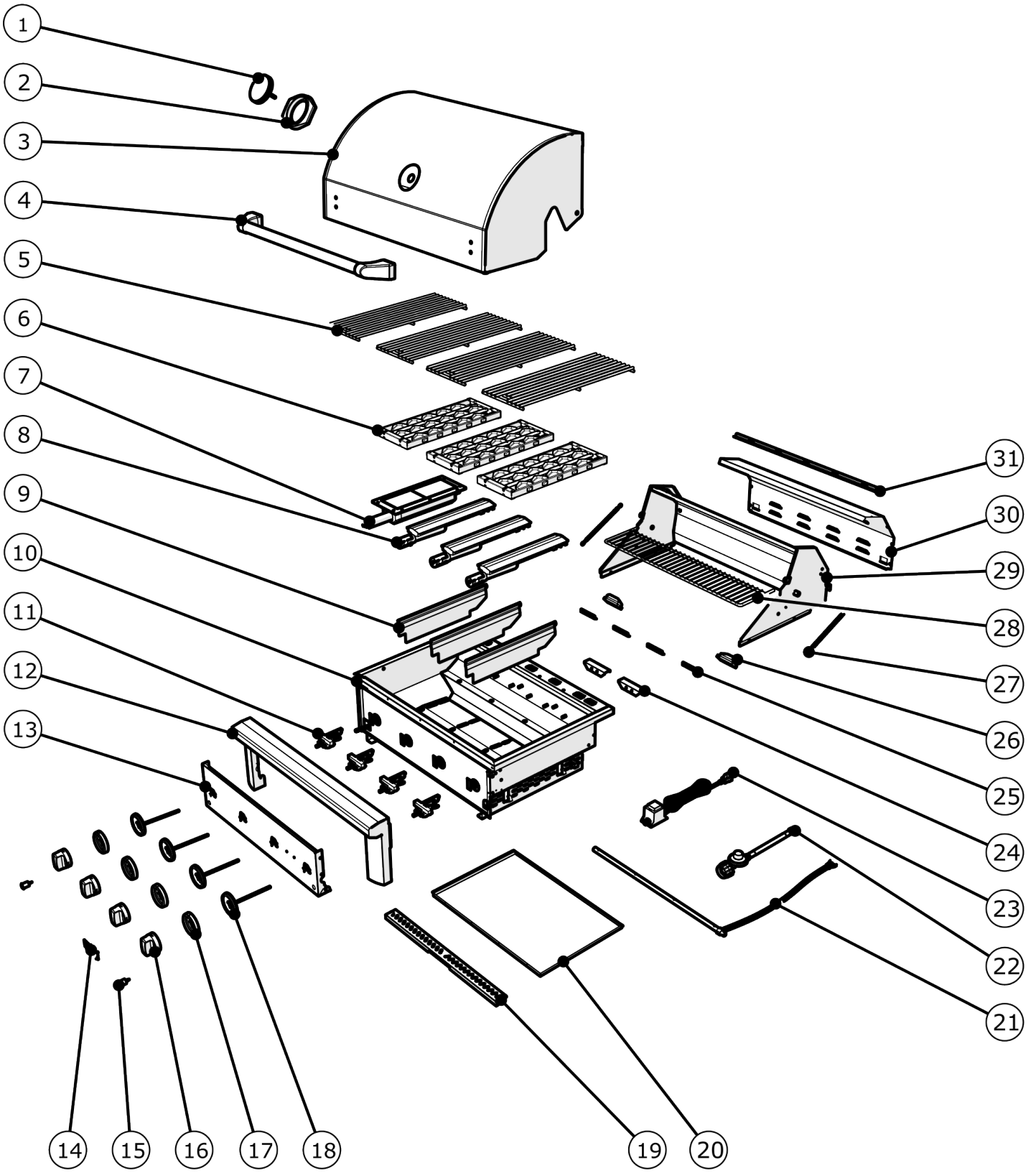

*See Parts List on following page

PARTS ORDERING

PARTS ORDERING FOR EMBER 32" GRILL			
NO.	PART	QTY	PART NO.
1	Thermometer	1	09-00005
2	Thermometer Base	1	02-00307
3	Hood	1	02-00686
4	Hood Handle, Chrome	1	02-00306
5	Grill Grate	4	02-01485
6	Ceramic Briquette Tray	3	13-00180
7	Sear Burner	1	09-00100
8	I-Burner, Cast Stainless	3	02-01492
9	Heat Divider	3	02-01495
10	Firebox	1	non-replaceable
11	Gas Valve, Liquid Propane (LP)	4	10-00018
	Gas Valve, Natural Gas (NG)		10-00019
12	Control Panel	1	02-01489
13	Facia, Black Stainless Steel	1	02-01490
	Facia, Stainless Steel		02-01491
14	Ember Badge	1	02-01481-01
15	Light Switch	2	01-00087
16	Control Knob, Chrome	4	02-01061-04
17	Control Knob Base, Chrome	4	02-01118-04
18	LED Light Ring	4	01-00088
19	Drip Tray Handle	1	02-01494
20	Drip Tray	1	02-01493
21	Manifold Gas Pipe Assembly	1	13-00181
22	Pressure Regulator, Liquid Propane (LP)	1	10-00023
	Pressure Regulator, Natural Gas (NG)		10-00020
23	Transformer	1	01-00089
24	Flame Air Chute/Flame Crossover	2	02-01488
25	Burner Shield	4	02-00323
26	Halogen Light with Blue Lens	2	13-00177
27	Hood Spring	2	02-00313
28	Warming Rack	1	02-01484
29	Lower Hood	1	02-01487
30	Hood Rear Panel	1	02-01483
31	Wind Guard	1	02-01482

WARRANTY

Wildfire Outdoor Living Products (”Wildfire”) offers a limited warranty to the original purchaser of each Outdoor Gas Grill, Side Burner, and Griddle, subject to the terms and conditions outlined below. This warranty is non-transferable and valid only with proof of purchase. It covers defects in workmanship and materials under normal residential use for the specified periods. This warranty does not cover surface corrosion, scratches, or discoloration caused by regular use.

Please Note: This warranty is void for Wildfire products used in rental or commercial.

- Limited Lifetime Warranty:
  - Stainless Steel Housing and Frame.
  - Cooking Grids, Warming Rack, and Heat Dividers.
  - Cast Stainless Burners and Infrared Burners.
- Limited Five-Year Warranty:
  - Valves and Manifold.
  - Ignition Systems.
  - Ceramic Briquettes and Trays
- Limited Two-Year Warranty:
  - Electric/Plastic Components.
- Limited One-Year Warranty:
  - All parts and components are covered for one (1) year, including shipping and handling. Wildfire also provides a one (1) year labor credit for pre-approved warranty repairs. Please refer to the Labor Credit Policy section of this warranty for additional details and requirements.

Warranty Terms and Conditions

Wildfire may, at its discretion, repair or replace any defective part during the warranty period.
This warranty does not cover normal wear and tear or damage resulting from:

- Negligent use, misuse, or improper use of the product.
- Use with incorrect fuel or gas supply.
- Non-compliance with operating instructions.
- Unauthorized alterations or repairs.

Any repair or replacement will not extend the warranty period.

Common Area Limited Warranty

- Limited Two-Year Warranty:
  - Stainless Steel Housing and Frame.
  - Cooking Grids, Warming Rack, Heat Dividers, Ceramic Briquettes, and Trays.
  - Cast Stainless Burners and Infrared Burners.
  - Valves and Manifold.
  - Ignition Systems.
- Limited One-Year Warranty:
  - Electric/Plastic Components.

Limits and Exclusions

This warranty does not cover:

- Failures caused by accidents, abuse, misuse, alterations, misapplication, vandalism, improper installation, or unauthorized maintenance or service.
- Damage caused by flashback fires, grease fires, or other hazards as outlined in the Owner’s Manual.
- Scratches, dents, corrosion, or discoloration due to weather, heat, abrasive cleaners, pool or spa chemicals, or tools used during assembly or installation.
- Paint loss, surface rust, corrosion, or stainless-steel discoloration considered normal wear and tear.
- Costs associated with inconvenience, personal injury, or property damage resulting from improper use or product failure.
- Deterioration or damage due to severe weather conditions (e.g., hail, hurricanes, earthquakes, tsunamis, tornadoes), terrorism, or other Acts of God (including exposure to chemicals in the atmosphere).
- Products sold to consumers from showroom displays carry a one-year warranty, provided they are inspected and approved by a certified Wildfire servicer prior to sale.

WARRANTY

Warranty Claim Procedure

Please get in touch with our Customer Success team for assistance if you require service or replacement parts. We are open Monday through Friday, 8:00 a.m. to 4:30 p.m. MST. You can reach us by phone at 602-344-4840 or via email at support@wildfireoutdoorliving.com. Please ensure you have registered your products before submitting any warranty claim. When submitting a warranty claim, please have your model number, serial number, and proof of purchase ready.

Wildfire Outdoor Living may request that defective parts be returned for examination. If so, the customer must prepay shipping charges. If Wildfire confirms that the part is defective, they will replace it at no charge. The customer is responsible for shipping and handling costs for replacement parts. Repair or replacement of parts is the exclusive remedy under this limited warranty. Wildfire Outdoor Living will not be liable for any incidental or consequential damages.

One-Year Limited Warranty

For one (1) year from the date of original purchase, Wildfire Outdoor Living warrants that its grills, griddles, and burners will be free from defects in materials and workmanship under normal residential use.

During this one-year period, Wildfire Outdoor Living will, at its discretion, repair or replace any component found to be defective. Approved warranty repairs include replacement parts and a limited labor credit, provided all warranty procedures are followed.

Proof of purchase is required for all warranty claims.

Labor Credit Policy

Wildfire Outdoor Living provides a limited labor credit for eligible warranty repairs performed within one (1) year of the original purchase date.

To qualify for labor credit:

- Wildfire Outdoor Living must be contacted prior to any service being performed for troubleshooting and authorization.
- An authorization number must be issued before repair work begins.
- A valid sales receipt or invoice must be provided.

Labor reimbursement is limited to up to $100 per unit, per occurrence and applies only to labor directly related to the repair of a confirmed manufacturing defect.

- Travel or trip charges
- Mileage or fuel surcharges.
- After-hours service fees.
- Installation corrections.
- Cleaning, maintenance, or adjustments.
- Service calls where no defect is found.

All labor credit requests must be submitted through the original selling dealer or distributor. The dealer or distributor will coordinate directly with Wildfire Outdoor Living for approval and reimbursement.

Wildfire Outdoor Living reserves the right to approve, deny, or request additional documentation for any labor credit claim.

HOW TO CONTACT US

CUSTOMER SUPPORT

customerservice@wildfireoutdoorliving.com

(602) 344-4840

PRODUCT REGISTRATION

To ensure full warranty coverage and receive important product updates, please register your Wildfire product within 30 days of purchase. Registration helps us confirm your ownership, provide faster service, and keep you informed about safety or performance enhancements.

Have your product serial number, model number, and proof of purchase ready when completing registration.

You can register online at www.wildfireoutdoorliving.com/product-registration or scan the following QR Code:

NOTES

NOTES

EMBER™

BY WILDFIRE

RPG BRANDS

MODERN FLAMES® ELECTRIC FIREPLACES

EST. IN ARIZONA WILDFIRE OUTDOOR LIVING

GRAND CANYON GAS LOGS

SUMMIT® OPEN LUXURY FIREPLACES

(602) 344-4840

wild ireoutdoorliving.com

082026